SV505-1 Series Shop Manual

Sakai®

Section of Contents

Section **Page**

Introduction

About the Manual 1-1

How to Use the Manual 1-2

Panel Symbols 1-3

General Safety Instructions 1-5

Acronyms and Abbreviations 1-15

Identification

Compactor Controls Identification

Left View 2-2

Right View 2-3

Top View 2-4

Operators Station 2-5

Compactor Component Identification

Rear Drive Hydraulic Hoses 2-6

Front Drive Hydraulic Hoses 2-7

Steering Hoses 2-8

Hydraulic Brake Hose Network 2-9

Brake Pedal and Linkage 2-10

Center Pin 2-11

Vibrator Hydraulic Hoses 2-12

Drum and Vibrator (Model D) 2-13

Drum and Vibrator Motor (Model T and TF) 2-14

Fuel System 2-15

Hydraulic Propulsion, Vibrator and Steering Pump Assembly 2-16

Rear Drive Propulsion Motor....2-17
Front Drive Propulsion Motor....2-18
Vibrator Motor....2-19
Electric Components....2-20
Instrument Panel and Relays....2-21
Rear Axle....2-22
Intake System....2-23
Exhaust System....2-24
Cooling Hose and Radiator....2-25
Travel Controls (Forward/Reverse)....2-26
Hydraulic Coupling....2-27
Engine Mount....2-28
Differential (1of 2)....2-29
Differential (2 of 2)....2-30
Brake....2-31
Final Drive....2-32
Orbitrol....2-33
Steering Cylinder....2-34

Operation

Operating Systems Description

Diesel Engine....3-1
Hydraulic Drive System....3-2
Hydraulic Drive Circuit....3-3
Hydraulic Vibratory System....3-4
Hydraulic Vibratory Circuit....3-5
Hydraulic Steering System....3-6
Hydraulic Steering Circuit....3-7

Brake System 3-8

Combination Meter 3-9

Monitor Display 3-10

Tachometer 3-11

Temperature Gauge 3-11

Fuel Gauge 3-11

Engine Lamps 3-12

Starter Switch 3-12

Parking Brake Switch 3-12

Horn Button 3-13

Vibrator Amplitude Switch 3-13

Vibrator Selector Switch 3-13

Forward/Reverse Lever Vibration ON/OFF Switch 3-14

Engine Speed Change Switch 3-14

Compactor Speed Change Switch 3-14

Engine Diagnostic Switches 3-15

Forward/Reverse Lever 3-15

Unloader Valve 3-15

Fuse Box 3-16

Operating the Compactor

Release Brakes for Towing 3-17

Before Starting Inspection 3-18

Starting the Engine 3-19

Traveling 3-21

Stopping and Parking 3-22

Stopping the Engine 3-23

Vibratory Operation 3-23

Loading Using a Winch Equipped Trailer 3-25

Self Propelled Loading 3-27

Working With the Compactor.....3-28

Maintenance

Periodic Maintenance

Compactor Maintenance 4-2

Compactor Component Replacement Schedule.....4-2

Prior to Starting the Compactor 4-3

Lifting Compactor with Hoist.....4-4

Maintenance Procedures Every 10 Hours or Daily.....4-4

Maintenance Procedures Every 50 Hours.....4-5

Maintenance Procedures Every 250 Hours.....4-6

Maintenance Procedures Every 500 Hours.....4-9

Maintenance Procedures Every 1,000 Hours.....4-9

Long Term Storage 4-14

Connecting Booster Cable 4-15

Testing and Adjustment

Mechanical Adjustments

Seat Adjustment.....5-1

Scraper Adjustment.....5-1

Hydraulic Pump Testing and Adjustment

Measure Hydraulic Pressure Main Propulsion Circuit.....5-2

Adjust Hydraulic Pressure Main Propulsion Circuit.....5-3

Measure Propulsion Charge Pressure 5-4

Adjust Propulsion Charge Pressure 5-4

Measure Parking Brake Release Pressure..... 5.5

Measure Vibrator Circuit Pressure.....5-5

Adjust Vibrator Circuit Pressure.....5-6

Measure Vibrator Charge Pressure 5-7

Adjust Vibrator Charge Pressure 5-8

Measure Steering Circuit Pressure 5-9

Adjust Forward/Reverse Cable 5-10

Troubleshooting

Troubleshooting Guidelines 6-1

Wiring Diagram Color Codes. 6-2

Engine Warning Lamp is Illuminated 6-4

Engine Stop Lamp is Illuminated 6-8

Wait to Start Lamp is Illuminated 6-12

Vibration Lamp Does Not Illuminate When Vibration Engaged 6-16

Parking Brake Lamp Does Not Illuminate When Parking Brake Engaged 6-25

Engine Oil Pressure Lamp Illuminated 6-29

Hydraulic Oil Filter Lamp Illuminated 6-34

Tachometer Does Not Indicate Engine Speed 6-39

Hour Meter Does Not Work 6-49

Coolant Temperature Gauge Does Not Work 6-55

Fuel Gauge Does Not Work 6-60

Backup Alarm Does Not Work 6-64

Horn Does Not Work 6-71

Compactor Steering Malfunction 6-80

Vibration Does Not Work 6-85

Low Amplitude Vibration Setting Does Not Work 6-98

High Amplitude Vibration Setting Does Not Work 6-104

Can Not Turn Vibration From Forward/Reverse Lever 6-110

Compactor Will Not Start 6-116

Engine Will Not Idle Correctly 6-134

Engine Will Not Reach MID Speed....6-139

Engine Will Not Reach Full Speed....6-144

Compactor Will Not Move Forward and/or Reverse or Does Not Drive Correctly....6-151

Parking Brake Does Not Work....6-158

Compactor Will Not Change Speeds....6-166

Compactor Repair

Roller

Remove....7-1

Disassemble (*Vibratory Motor Side)*....7-4

Disassemble *(Drive Motor Side)*....*7-9*

Clean and Inspect for Reuse....7-12

Assemble *(Drive Motor)*....7-16

Assemble (*Vibratory Motor*)....7-20

Install....7-27

Center Pin

Remove....7-29

Disassemble....7-30

Clean....7-32

Assemble....7-32

Install....7-36

Operators Station

Remove....7-38

Install....7-40

Manual Vibration Control Switch

Remove....7-42

Install....7-43

Vibratory Control Panel Switches

Remove 7-43

Install 7-44

Combination Meter

Remove 7-45

Install 7-46

Parking Brake Button

Remove 7-48

Install 7-48

Engine Status Lamps

Remove 7-49

Install 7-50

Engine Start Switch

Remove 7-51

Install 7-51

Directional Control Lever Cable

Remove 7-54

Install 7-55

Directional Control Lever Micro-Switches

Remove 7-56

Disassemble 7.57

Assemble 7-57

Install 7-58

Foot Brake Switch

Remove 7-58

Disassemble 7-59

Assemble 7-59

Install 7-59

Speed Sensor (Combination Meter Tachometer)

Remove 7-60

Install 7-60

Coolant Temperature Sensor (Combination Meter Temperature Gauge)

Remove 7-61

Install 7-62

Fuel Level Sensor (Combination Meter Fuel Level Gauge)

Install 7-62

Remove 7-63

Battery Relay

Remove 7-63

Install 7-64

Operator's Station Relay and Diodes

Remove 7-65

Install 7-65

Horn

Remove 7-66

Install 7-66

Hydraulic Oil Filer Switch

Remove 7-66

Install 7-66

Tachometer Control Box

Remove 7-67

Install 7-67

Radiator and Cooling System

Remove 7-67

Install 7-69

Hydraulic Tank

Remove 7-71

Install 7-72

Engine and Pump Assembly

Remove 7-73

Disassemble 7-78

Assemble 7-80

Install 7-83

Rear End

Remove 7-90

Install 7-91

Back Up Alarm

Remove 7-92

Install 7-93

Starter Relay

Remove 7-93

Install 7-94

Engine Speed Change Switch

Remove 7-94

Install 7-95

Forward/Reverse Lever Vibration Switch

Remove 7-96

Install 7-97

Fuses 65 Amp and Above

Remove 7-98

Install 7-98

Parking Brake Valve

Remove 7-98

Install 7-99

Vibration Amplitude Solenoid

Remove 7-99

Install 7-100

Compactor Speed Solenoid

Remove 7-100

Install 7-101

Orbitrol Steering Valve

Remove 7-101

Install 7-102

Schematics

Electrical 8-1

Hydraulic 8-2

Service Literature

Additional Service Literature 9-1

Specifications

Compactor General Specifications 10-1

Compactor Overall Specifications 10-4

Overall Coolant Levels 10-4

Battery Electrolyte Reading 10-4

Compactor Capacity 10-4

Fuel Oil and Grease Rating 10-5

Recommended Lubricants 10-5

Rear Drive Specifications 10-6

Hydraulic Motor Specifications 10-7

Metric to US Torque 10-8

Fraction to Decimal to Millimeter Conversions 10-9

Metric Drill and Tap Chart 10-11

Weights and Measures Conversion Factors 10-15

How to Use the Manual

Prior to operation of the compactor read the following sections:

- Introduction
- System Identification
- Familiarization.

Use the Maintenance section to schedule and perform maintenance. The maintenance is performed at the following intervals:

- Every 10 hours or daily
- Every 50 hours
- Every 250 hours
- Every 500 hours
- Every 1000 hours.

Refer to the Operation and Maintenance Manual QSB4.5 and QSB6.7, Bulletin 4021531 for Cummins® Engine maintenance schedule.

When a compactor issue has been identified use the Troubleshooting section of this manual. The troubleshooting section is divided into procedures that are symptom driven. Each of the individual procedures is designed to troubleshoot the most likely problem area first. When the problem area is identified the procedure will refer you to the appropriate disassembly and assembly procedure.

To troubleshoot Cummins® Engine electrical problems refer to the Troubleshooting and Repair Manual CM850 Electronic Control System ISB, ISBe4, QSB4.5, QSB5.9, QSB6.7, ISC, QSC8.3, ISL and QSL9 Engines, Bulletin 4021416.

To troubleshoot Cummins® engine mechanical problems refer to the Service Manual ISB, ISBe4 and QSB (Common Rail Fuel System) Series Engines, Bulletin 4021271.

Cummins® QSB4.5, QSB6.7, QSC8.3, and QSL9 CM850 Electronic Control Module Wiring Diagram, Bulletin 4021524 is needed to troubleshoot engine electronic issues.

The Compactor Repair Section supplies direction with illustration to remove, clean and inspect for reuse, disassemble, assemble and install individual compactor components.

The schematic section has hydraulic schematics and electrical wiring diagrams for troubleshooting use. The troubleshooting trees will refer to the wiring diagram or hydraulic schematic. Component and wire terminology are consistent throughout the manual.

A specification section has been provided to aid in repair.

Panel Symbols

The symbols listed below appear in the combination meter. The lamps are located adjacent to the meter.

Battery Charge Symbol – Illuminates when charging system is not functioning correctly. The engine must be running for the lamp to illuminate.	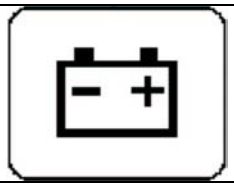
Hydraulic Oil Filter Symbol – Illuminates when the hydraulic oil filter is restricted.	
Turn Signal Indicator Symbol – Illuminates when the turn signal lever is moved. Turn signals are an option.	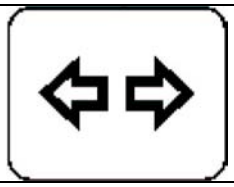
Engine Oil Pressure Warning Symbol – Illuminates when there is a low engine oil pressure issue.	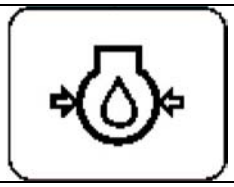
Parking Brake Symbol – Illuminates when the parking brake is engaged.	
Flood Lamp Symbol – Illuminates when the flood lamps are turned on.	
Vibration Symbol – Illuminates when the compactor has vibration engaged.	

Engine Stop Lamp – Illuminates when the engine must be shut down. Shut down the engine when this lamp is on.	ENGINE STOP
Warning Lamp – Illuminates when water has accumulated in the fuel sedimeter. Drain the sedimeter. The lamp will extinguish when the water is removed.	WARNING
Wait to Start Lamp - Illuminates when engine electronic control module is performing a self-diagnostics test. Do not attempt to start the engine when this lamp is illuminated.	WAIT TO START

General Safety Instructions

⚠ **Warning**

Improper operation, carelessness, or ignoring the warnings can cause cuts, burns, mutilation or death.

⚠ **Warning**

Do not operate your machine before the manual is read. Incorrect operation can kill or cause injury. It is your responsibility to operate the machine safely.

Read and understand this manual prior to operating, troubleshooting or repairing of the compactor.
The table below contains common warnings. To reduce the possibility of personal injury or equipment damage always follow all Danger, Warning or Caution instructions.

- Make sure area that work is to be performed in is dry, well-lit, ventilated, free from clutter and hazardous substances.
- Always wear personal protective equipment when operating and working with this equipment.
- Do not wear loose fitting or torn clothing. Remove all jewelry when working.
- Disconnect the negative (-) battery first and discharge any capacitors before beginning any work. Place a Do Not Operate tag on the start switch.
- Rotating parts can cause cuts, mutilation or strangulation.
- If the engine has been operating and the coolant is hot, allow the engine to cool before slowly loosening the filler cap to relieve the pressure from the cooling system.
- Always use blocks or proper stands to support the compactor. Do not work on anything that is supported only by lifting jacks or a hoist.
- Relieve all pressure in the air, oil, hydraulic oil, fuel and cooling systems before disconnecting any lines, fittings or related components. Stay alert for possible pressure when disconnecting any device from a system that uses pressure. Do not check for pressure with your hand. High-pressure oil, hydraulic oil or fuel can cause personal injury.
- To reduce the possibility of personal injury, use a hoist or get assistance when lifting components 50 lb [23 kg] or more. Make sure all lifting equipment is in proper working order.
- To reduce the possibility of burns, stay alert for hot parts on components that have just been turned off.
- Do not attempt a repair when fatigued or after consuming alcohol or drugs that impair your functioning.
- Some United States Federal and Stage agencies have determined that used engine oil can be carcinogenic. Avoid ingestion, vapor inhalation and prolonged contact with used engine oil.
- Coolant is toxic; keep away from children and small pets. If not reused dispose of in accordance with local environmental regulations.
- California Proposition 65 Warning – Diesel engine exhaust and some of its constituents are known to the State of California to cause cancer, birth defects and reproductive harm.
- This manual covers proper and safe method of driving and handling of this machine. The machine is to be used only for its intended use. When this machine is used in a manner other than that covered in this manual, you assume responsibility for your personal safety.
- You must be qualified to operate this machine.
- Non-approved modifications can pose safety-related problems. Before making any modifications, consult your distributor. Non-approved modifications to this machine can cause personal injury and machine damage. Sakai accepts no responsibility for un-approved modifications.
- Follow all worksite rules and working procedures.
- Know the terrain, geology and conditions of the road surface at the worksite. Post a safety watch or put up barriers where there is a chance of falling off of the machine or shoulder collapse.

- Decide in advance the means of communication in case of an emergency. Know the location and use of a fire extinguisher and first-aid kit.
- Thoroughly understand the performance of your machine and correctly operate the machine to meet the requirements at the job site. Operating the machine beyond its capability can lead to an accident. Operate the machine within its capability only.
- Do not use a machine that has not been serviced or has not been serviced correctly at regular intervals. Prior to operating the machine perform necessary inspections. Start the machine only after the machine is found to be in good working order. Correct any faults prior to operation.
- When removing the filler cap on the hydraulic tank, release the pressure by turning it out slowly to prevent oil from flowing out.
- Mount or dismount the machine after it has come to a complete stop. Use the handrail and steps when entering or exiting the machine.
- Wear safety goggles to protect your eyes from hydraulic fluid. Hydraulic fluid can irritate the eyes. If hydraulic fluid comes in contact with your eyes, flush with water for 15 minutes and seek medical attention.
- Use gloves when handling hydraulic fluid. Hydraulic fluid can irritate the skin.
- Do not ingest hydraulic fluid. If ingested seek medical attention. Do not induce vomiting.
- Do not place parts, tools or un-necessary items on the steps, operator's station or floorboard.
- Keep steps, floorboard, controls and handholds free from mud, oil, ice or water. Mud, oil, ice or water can cause slips.
- Keep boots free from oil or water.
- Check all of the fluid levels prior to starting. Add fluid as necessary.
- Check area where machine is parked for signs of oil or coolant leaks. If there are leaks, find the cause and correct the leaks.
- Know the stopping distance of your machine. Avoid excessive speed and abrupt starting and stopping.
- Sit on operator's seat and adjust it so that your back will make contact with the seat when the brake pedal is depressed to the full extend of travel. Check to be sure the brake can be fully depressed without difficulty when your body is twisted for a reverse run.
- If the machine has a cabin, keep the windowpanes clean and the doors closed. Do not leave the doors half closed.
- Clean mirrors and adjust them for good visibility. If mirrors are damaged, they must be replaced.
- Check to make sure horns and gauges work correctly.
- Before starting the machine, make sure that each lever is in the neutral position and the parking brake is applied.
- Before starting the machine, make sure there is no one in the vicinity and there are no obstructions. Sound the horn prior to starting.
- Exhaust fumes are dangerous if breathed in. Make sure the machine is in an area with good ventilation prior to starting engine. Do not stand next to the exhaust pipe when the engine is running.
- Do not put the machine into motion immediately after the engine has started. Let the engine idle until it has reached operating temperature.
- Make a test run in a safe place to be sure the engine is operating correctly.
- Listen for unusual sounds and check for abnormal temperature rise. Park the machine in a safe location, find the source and repair before operating.
- The machine is designed for one operator only; do not allow anyone to ride on the machine. Only the operator is allowed on the machine while running or operating. Radios are not permitted.
- Make sure no one is around or under the machine when mounting it.
- When advancing up or down a hill run at low speeds. Do not attempt to shift speeds while traveling on a grade. Moving down a hill at high speeds can cause the machine to react violently. Do not shift speeds on a slope. Shifting can cause the machine to move down the hill at high speeds.

- Inattentive driving or driving relying on guesswork can cause an accident. Use extreme caution when workers are in the path of the roller or around it. In case of danger, stop and sound the horn. Proceed when the area is clear of personnel or obstructions.
- When changing the direction of travel make sure the path is clear in the new direction.
- Keep everyone away from pinch points. When making turns do not allow anyone to come close to the pinch points.
- When driving at night, carefully drive the machine at a speed suited to the illumination. Keep headlights and flood lamps illuminated. Provide extra lighting in work area if necessary.
- If a fault lamp indicates faulty operation, park the machine in a safe place and repair the machine. Do not operate machine until the fault is corrected.
- Only operate the machine from the operator's seat. Do not operate the machine while standing.
- When making a turn do not run at abnormally high speed and do not turn the steering wheel abruptly or sharply.
- When traveling on structures, such as bridges, make sure the structure can support the weight of the machine. Before traveling on a structure you must know the load capacity of the structure and the load of the machine.
- Do not make turns on a slope. Do not travel across the side of a hill. Go down the hill to level ground and make the turn.
- Park on level ground if possible. If necessary to park on a slope, place chocks on the drum at the down side of the slope.
- When required to park on a public road, provide necessary markings, such as a flag, barriers, and illumination. Make sure markings do not obstruct traffic.
- Use extreme care when loading and unloading your machine. Select hard, level ground leaving a sufficient distance from the shoulder. Use sturdy ramps with proper width, length and thickness that allow for safe use.
- To reduce the possibility of the machine slipping crossways, keep the ramps free from oil, mud and debris. The drum must also be free from debris that can cause the machine to slip.
- Do not steer the machine while on the ramp when loading. If the machine is not on the ramps correctly, back down the ramp, realign the machine and load the machine.
- Do not use kinked, twisted or damaged cable for crane or winch operation. Make sure the cable is rated for the weight of the machine.
- After the machine is loaded, place wooden chocks under the drum(s) and secure the machine with chains.
- Select a transporting route according to the overall width, height and GVW. GVW is the machine added to the truck weight.
- Batteries contain sulfuric acid. If sulfuric acid is on clothes or skin, flush with large quantities of water.
- If sulfuric acid is in eyes, flush with water and seek medical attention.
- If sulfuric acid is ingested, drink large amounts of water, milk, beaten egg, or vegetable oil and seek medical attention.
- Wear safety goggles when handling the battery.
- Wear safety goggles, full-face shield, rubber gloves, rubber apron when adding electrolyte to the battery.
- The battery generates flammable gases that can cause an explosion. Do not smoke or have open flames, sparks and ignition sources around the battery.
- Battery posts, terminals, and related accessories contain lead and lead compounds, chemicals known to the State of California to cause cancer and reproductive harm. Wash hands after handling the battery.
- Inspect or handle the battery with the engine shut down and the starter key switch in the OFF position. Keep metal items away from the battery terminal. Make sure battery connectors are tight. Loose connectors on terminals can cause sparks.
- When checking the coolant level, shut down the engine and allow the coolant to cool down.
- For inspecting the level of fuel, oil, coolant and battery electrolyte use a burn-proof illumination. Failure to use burn-proof illumination can cause an explosion.

- When connecting the batteries from another machine for jump-starting, do not allow the machines to touch, wear safety goggles. Connect the positive (+) jumper cable first and disconnect the negative (-) jumper cable first. When connecting the negative (-) jumper cable to ground, select an area on the machine as far from the battery as possible. Do not cross connect jumper cable (positive (+) terminal to negative (-) terminal).
- If towing a machine, use cable with the rated strength for the machine. Do not tow on a slope. Do not use twisted, kinked or damaged cable. Do not tow on a slope. Never stand astride a towing cable. Keep all non-essential people away from the machine area when towing.
- Prior to servicing a machine attach a warning tag clearly visible from the operator's station and remove the key from the ignition. A sample DANGER tag is attached to this procedure.
- Use the proper tool for the job. Using a tool that was not designed for the job can cause personal injury and/or equipment damage.
- Complete all maintenance, at the intervals required by this manual. If the maintenance is not performed at the intervals equipment damage or personal injury can result.
- If maintenance is required to be performed while the engine is running, such as radiator flushing, perform the work with two people. One person must be in the operators seat ready to shut the engine down. Care must be taken by the safety person not to engage additional features un-intentionally.
- Clean up all spilled oil, coolant or fuels immediately. Keep filler caps tight. Do not use fuel for flushing oil. Handle fuel and oil in a well-ventilated area.
- Do not allow un-authorized persons in the work area when grinding, welding or heavy hammers are used.
- Keep the machine clean and free from oil, grease or debris. Liquids that penetrate into the electrical system can cause machine damage. Do not use water to clean sensors, connectors or the operator station.
- When welding on the machine disconnect the battery.
- Do not try to bend or hit high-pressure hoses against a hard object. Do not use hoses or pipes that are bent or damaged. Replace damaged fuel lines or damaged hydraulic hoses.
- Do not add, drain, inspect or service hydraulic systems until internal system pressure is released. Hydraulic fluid leaking through a pinhole can penetrate the eyes and skin. If you come in contact with high-pressure oil, seek medical attention. Inspect for a leak by holding a hard board close to the area.
- After the machine has been in operation, the coolant, engine oil, hydraulic oil, and machine components become hot. Wait until the machine cools down to begin repairs.
- Do not inspect the engine-cooling fan while the engine is running. Rotating engine cooling fan blades can cause personal injury and equipment damage.
- Do not discard used oil into a drain or waterway. Drain the oil into a proper container and dispose of in accordance with local environmental regulations.
- Use extreme care when replacing tires. Do not attempt to repair the tires. Take the tire to an authorized tire shop for repairs. The tire is of a split rim design and can cause personnel injury if proper equipment is not used. When dismounting a tire chock the other tire.
- When welding around the tires make sure the tires are protected from sparks. If sparks penetrate the tire, an explosion can result.

Below is an example of a tag used to secure an engine from operation. This page may be removed and the tag cut out. There is a front and back view of the tags. It is recommended to join the front with the back and laminate the tag.

The table below lists commonly used Caution, Warning and Danger symbols.

Denotes there is an extreme hazard. If you fail to take proper precautions, it is highly likely that you could be killed or seriously injured (the symbol color is red).	Danger
Denotes there is a hazard. If you fail to take proper precautions, you could be killed or seriously injured (symbol is orange).	Warning
Calls attention to safety practices. If you fail to take proper precautions, you could be injured or cause damage to the machine (symbol is yellow).	Caution
Understand the functions of the controls and gauges. Familiarize yourself with their location and operation. Understand the meaning of all symbols.	
Battery sulfuric acid warning.	
Indicates hazardous liquids disposal is required such as: • Engine oil • Hydraulic oil • Sulfuric acid from battery • Engine coolant.	
Eye protection is required to perform task.	
Gloves required to perform task.	
Hardhat is required in work area.	
Hearing protection is required in work area.	

Sounding horn is required for safe operation.	
Hot surface during and after machine operation.	
High-pressure hydraulic leak check and warning.	
No open flames allowed.	
No open flame, smoking or ignition allowed.	
Area is pinch hazard when machine is operating.	
Respiratory equipment is required in work area.	
No high speed on down hill grade with machine.	
Rotating parts warning.	
Eye protection required in work area.	

Safety shoes required in work area.	
Tire penetration with hot spark explosion warning.	
No unauthorized people in work area.	
Use spark proof illumination when inspecting this area.	
Use the proper tool for the proper job.	
Ventilation required to eliminate toxic fumes.	
Disconnect battery prior to welding on machine.	

The safety decals used on the SV505 are shown below.

CALIFORNIA
Proposition 65 Warning
Diesel engine and some of its constituents are known to the State of California to cause cancer, birth defects, and other reproductive harm.
3998-16499-0

CAUTION
Lubricate all grease fittings daily prior to commencing work.
3998-16507-1

DANGER
Be Careful with Fire
- When refueling, stop the engine and do not smoke.
- The filter cap of the fuel tank must be kept tight.

3998-16501-0

DANGER

EXPLOSIVE GASES
Cigarettes, flames or sparks could cause battery to explode. Always shield eyes and face from battery. do not charge or use booster cables or adjust connections without proper instruction and training.

CHEMICAL BURNS
Contains sulfuric acid. Avoid contact with skin, eyes or clothing. In event of accident flush with water and call a physician immediately.

3998-16559-0

WARNING
- Do not open the hood with the engine running.
- Contact with hot parts will cause burns.
- Contact with rotating parts will cause severe injury.

3998-16499-0

WARNING

1. When Handling the Machine:
- Operate only while seated.
- Use the handrails and steps when boarding and getting off.
- Never carry passengers.
- Never attempt to board or get off the machine while it is moving.

2. Preparation for Safe Operation
- Clean the steps, operator's station and floorboards.
- Obey the worksite rules.
- Sakai accepts no responsibility for any injury or damage to the machine caused by unapproved modification.
- Do not use a machine which needs repair or maintenance.
- Sound the horn immediately prior to starting the engine to warn people in the vicinity.

3. Starting the Engine
- Check that all operating levers are in the neutral position.
- Idle the engine for about 5 minutes to warm it up prior to commencing work.

4. Parking Precautions
- When parking the machine, park it on level ground, set the parking switch and set the roller chocks.
- Allow the engine to cool off by running it for about 5 minutes before stopping.
- When getting off the machine, remove the key from the ignition switch.

3998-16504-0

DANGER
- Do not approach, or allow objects to touch the rotating parts.
- Body parts which make contact with rotating mechanism will be severed.

- Do not open the radiator cap when fluid is hot.
- Radiator fluid is flammable. Avoid exposure to flame when radiator cap has been removed.

- Avoid contact with the machine parts in the vicinity of the engine while engine is running and after it has been stopped. Contact with hot part will cause burns.

3998-16502-0

WARNING
- Thoroughly read the operator's manual before using the machine.
- Incorrect operation can cause severe injury or death.
- It is your responsibility to operate the machine safely.

3998-16497-1

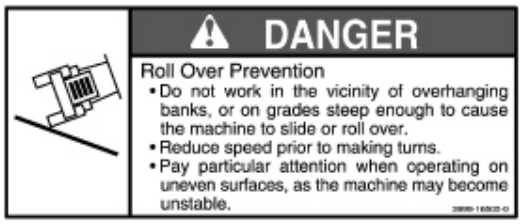
DANGER
Roll Over Prevention
• Do not work in the vicinity of overhanging banks, or on grades steep enough to cause the machine to slide or roll over.
• Reduce speed prior to making turns.
• Pay particular attention when operating on uneven surfaces, as the machine may become unstable.

CAUTION
When storing this machine, release the parking brake once a month to prevent it from jamming.
3998-16468-1

Acronyms and Abbreviations

The table below contains commonly used acronyms and abbreviations.

API	American Petroleum Institute
ASTM	American Society of Testing and Materials
BTU	British Thermal Unit
°C	Celsius
°F	Fahrenheit
CARB	California Air Resources Board
C.I. D.	Cubic Inch Displacement
ECM	Electronic Control Module
EPA	Environmental Protection Agency
GVW	Gross Vehicle Weight
hp	Horsepower
kPa	Kilopascal
MPa	Megapascal
mph	Miles per hour
OEM	Original Equipment Manufacturer
PPM	Parts Per Million
psi	Pounds Per Square Inch
SAE	Society of Automotive Engineers

Compactor Controls Identification

This procedure identifies all of the components used in normal operation of the SV505 compactor. The first graphic illustrates travel directions when sitting in the operator's seat.

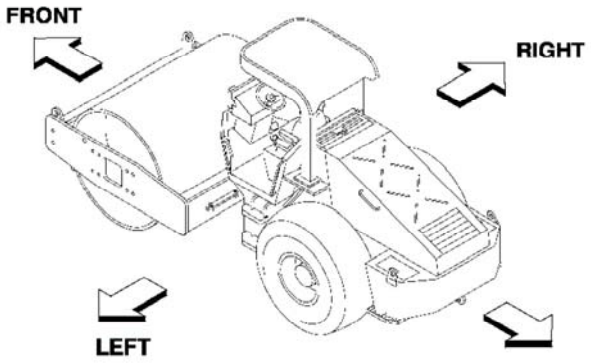

The model number is stamped onto a metal tag and located on the vibration control panel (upper frame of graphic). The serial number is stamped into the battery box and painted black (lower left frame of graphic). The engine data plate is located on the valve cover of the engine (lower right frame of graphic).

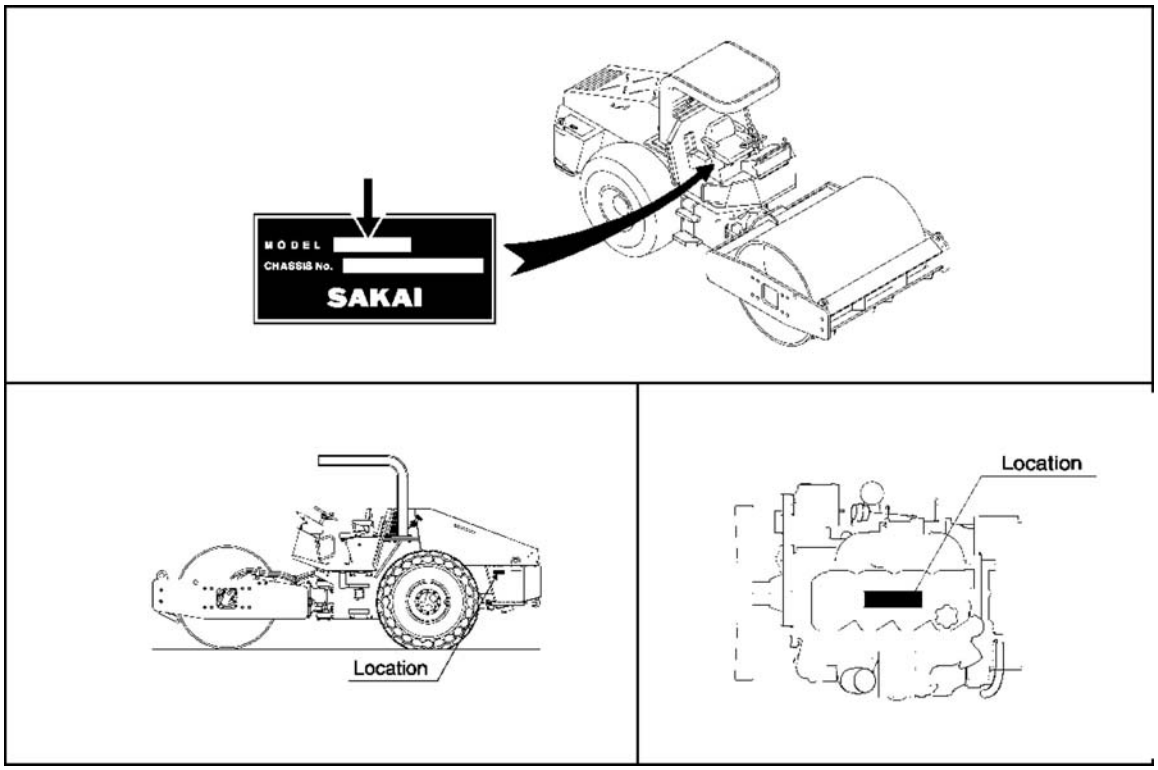

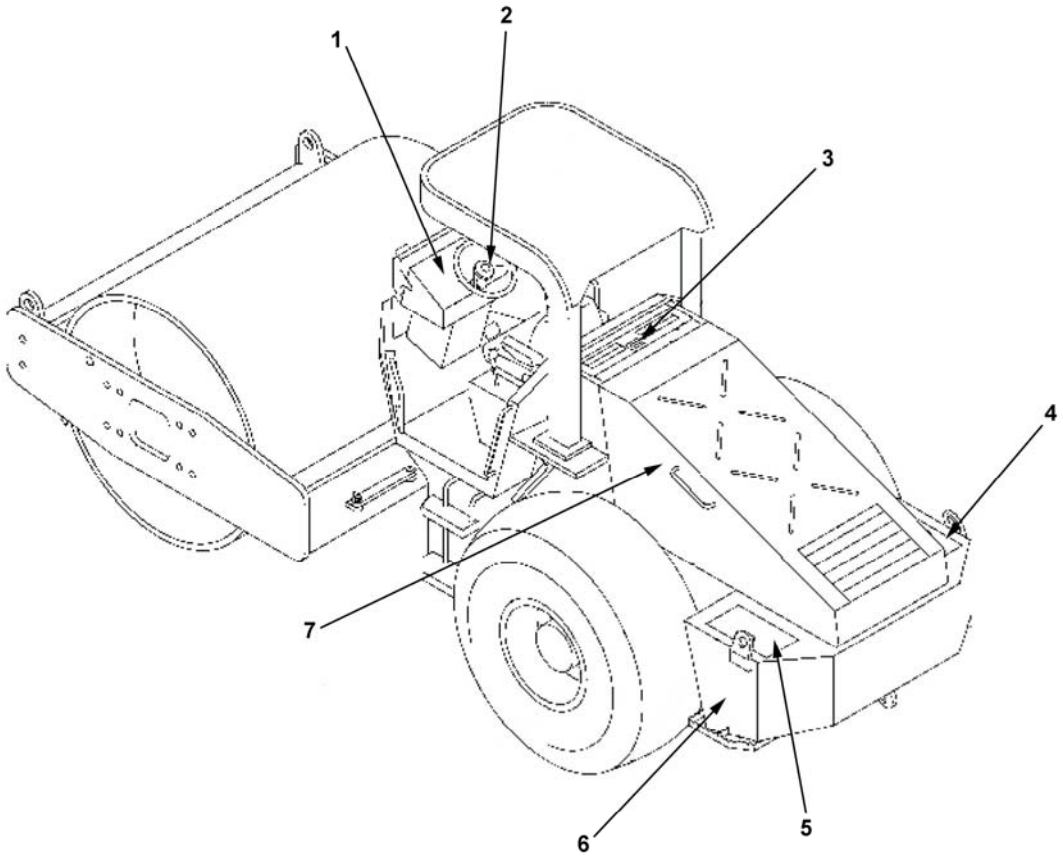

Left View

1. Operator information panel
2. Steering wheel
3. Radiator access door
4. Fuel tank
5. Battery box
6. Battery box door
7. Hood.

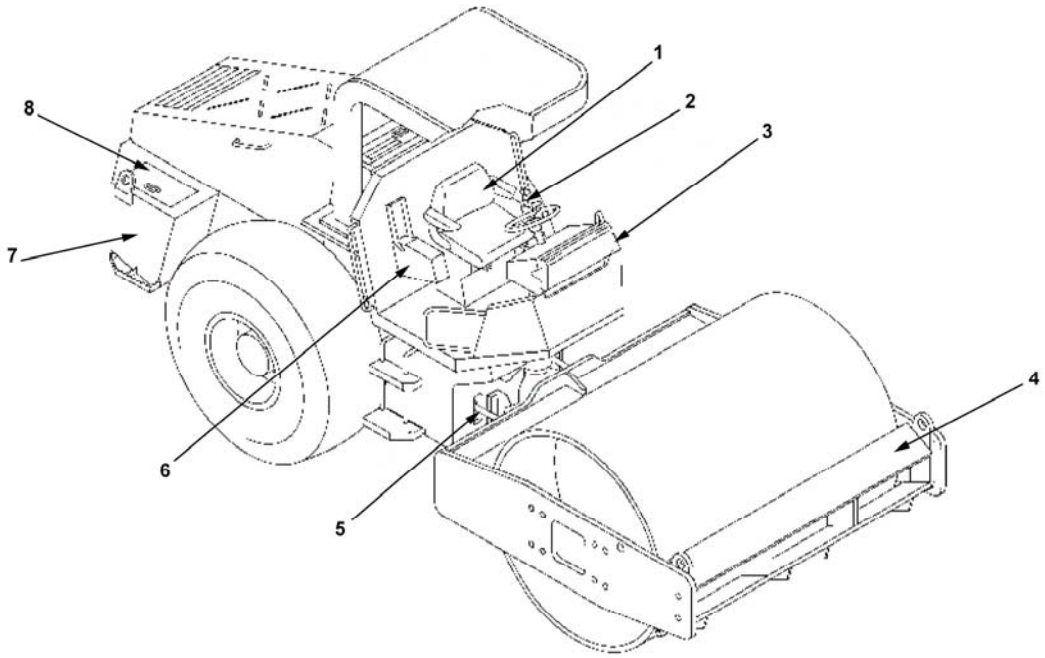

Right View

1. Operators seat
2. Forward/Reverse lever and vibration control button
3. Operator information panel door
4. Roller scraper plate
5. Left steering cylinder
6. Vibration control panel
7. Fuel tank
8. Fuel tank door.

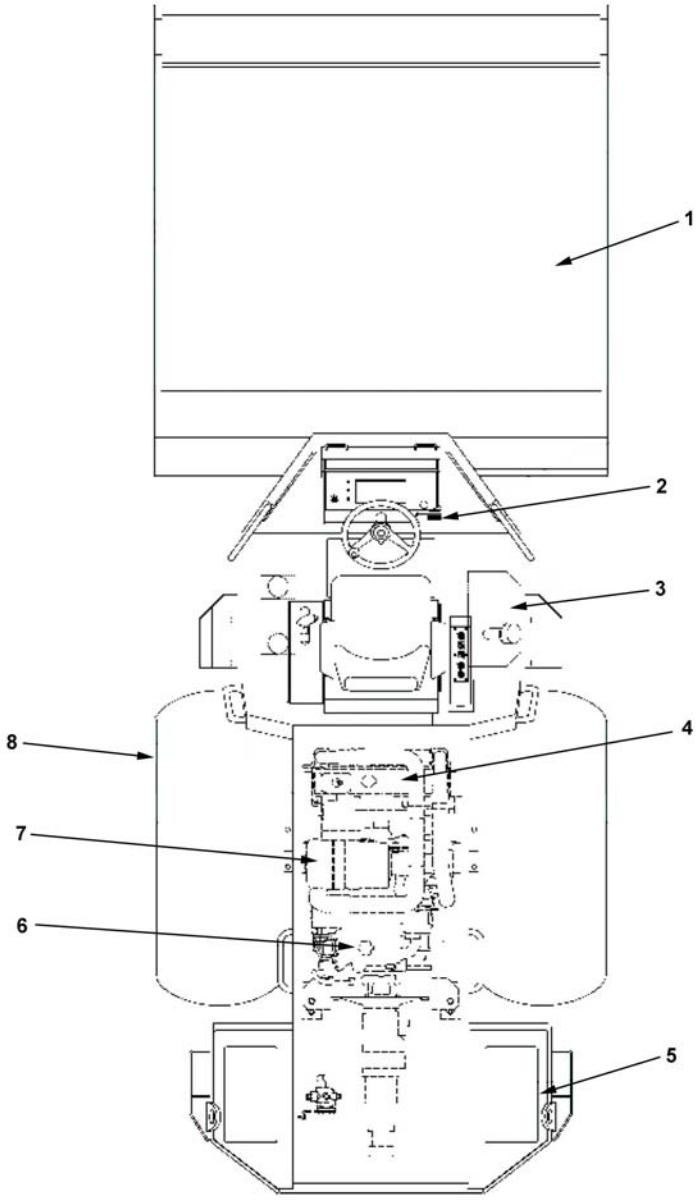

Top View

1. Roller
2. Brake pedal
3. Hydraulic tank
4. Radiator
5. Fuel tank door
6. Engine oil fill
7. Air filter
8. Pneumatic tire.

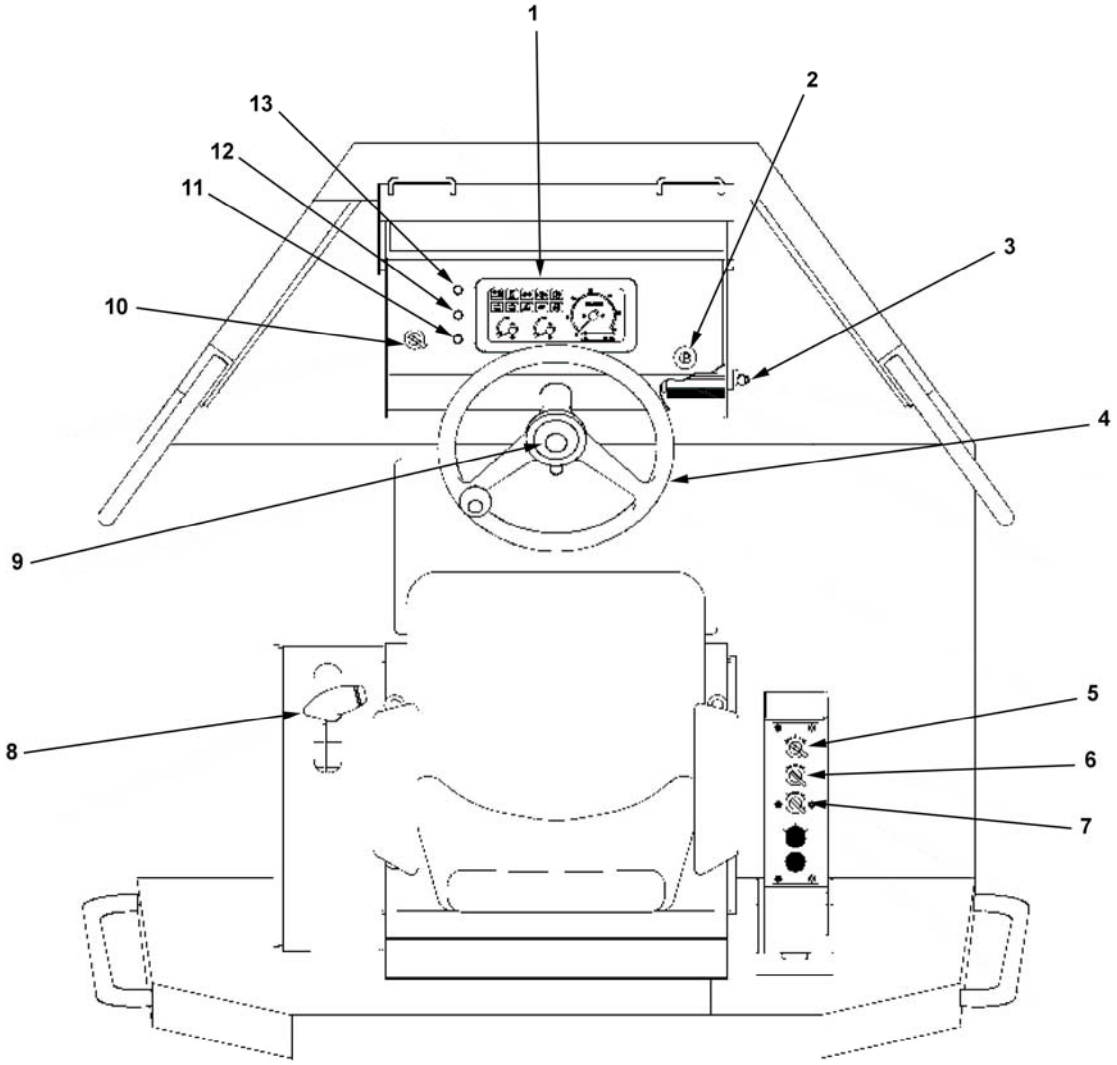

Operators Station

1. Combination meter
2. Parking brake button
3. Starter switch
4. Steering wheel
5. Vibration amplitude switch (minimum or maximum)
6. Vibration control switch (shift lever button or continuous)
7. Vibration speed switch (minimum or maximum)
8. Shift lever and momentary vibration button
9. Horn
10. Engine speed switch (idle, mid and full)
11. Wait to start lamp (amber)
12. Warning lamp (amber)
13. Engine stop lamp (red).

Compactor Component Identification

This procedure will illustrate the systems used in the SV505 compactor and show illustrated views of subcomponents.

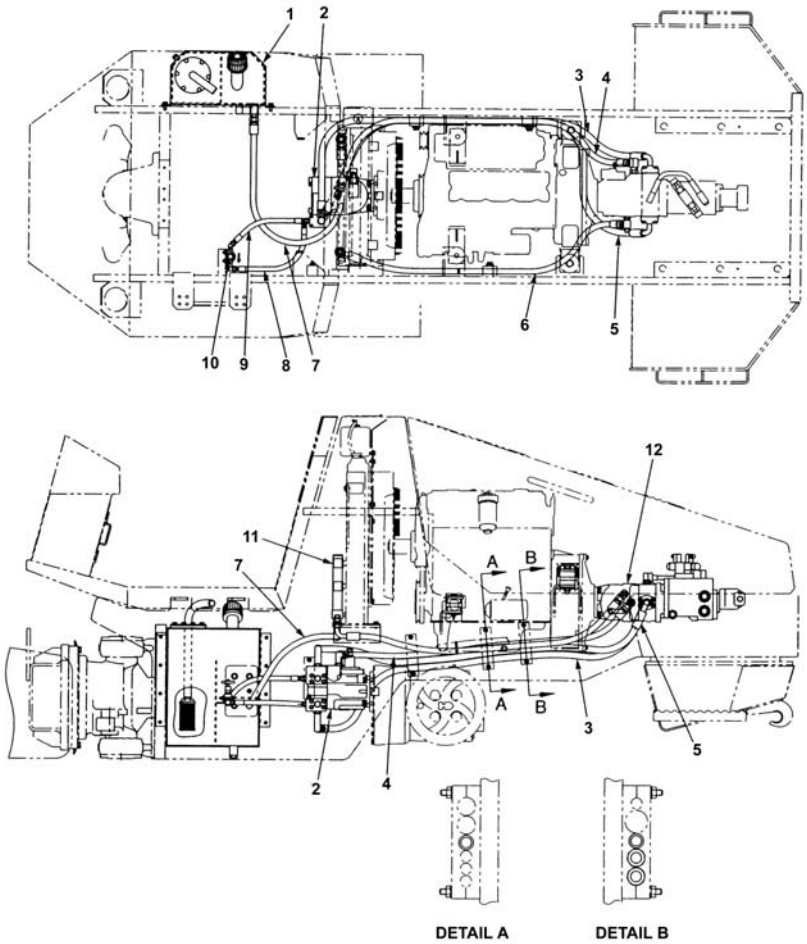

Rear Drive Hydraulic Hoses

1. Hydraulic tank
2. Rear hydraulic propulsion motor
3. Forward travel high pressure hydraulic hose
4. Motor to pump hydraulic hose
5. Reverse travel high pressure hydraulic hose
6. Pump to oil cooler hydraulic hose
7. Oil cooler to tank hydraulic hose
8. Unload hydraulic hose
9. Unload hydraulic hose
10. Un-loader valve
11. Hydraulic oil cooler
12. Hydraulic propulsion pump.

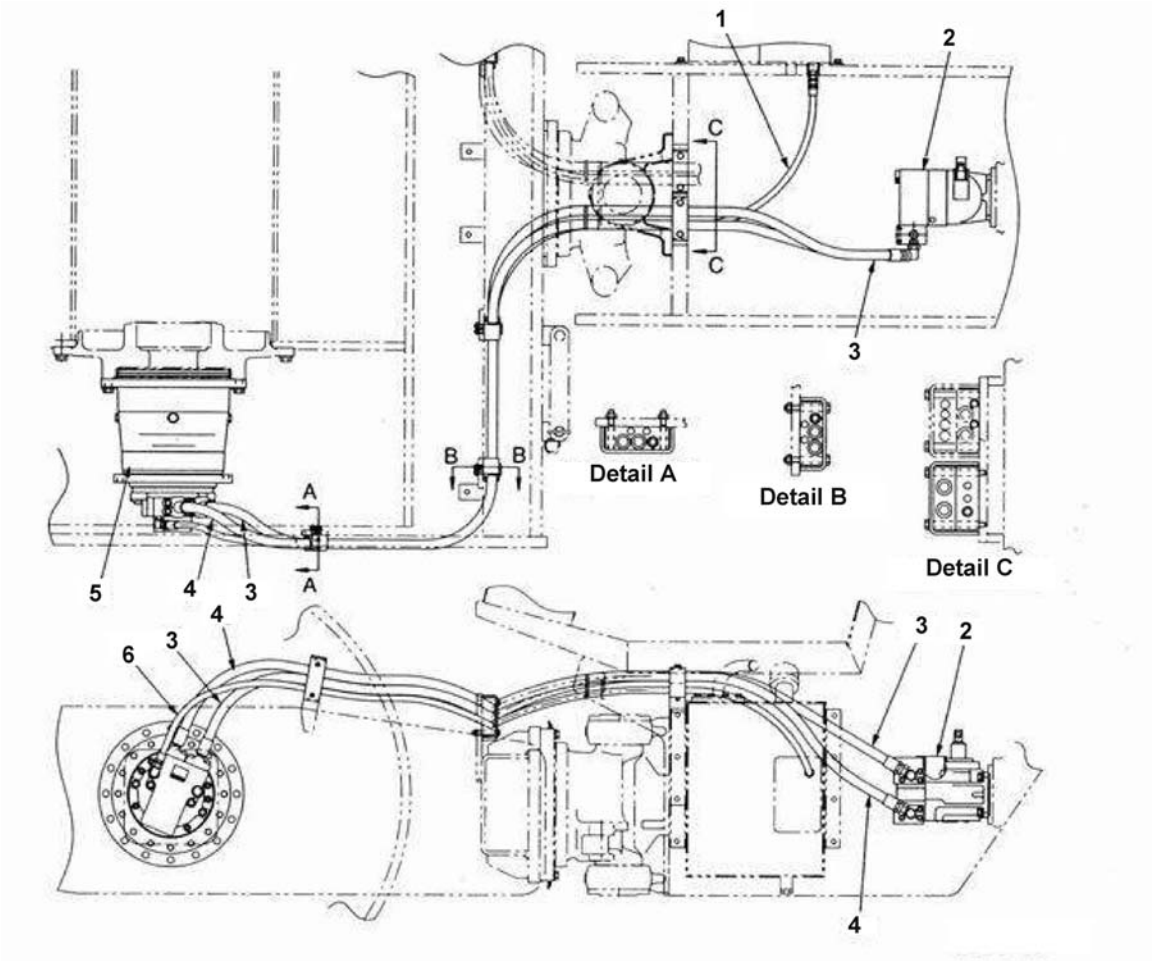

Front Drive Hydraulic Hoses

1. Return hydraulic hose
2. Rear propulsion motor
3. Reverse travel high pressure hose
4. Forward travel high pressure hose
5. Front propulsion motor
6. Hydraulic motor return hose.

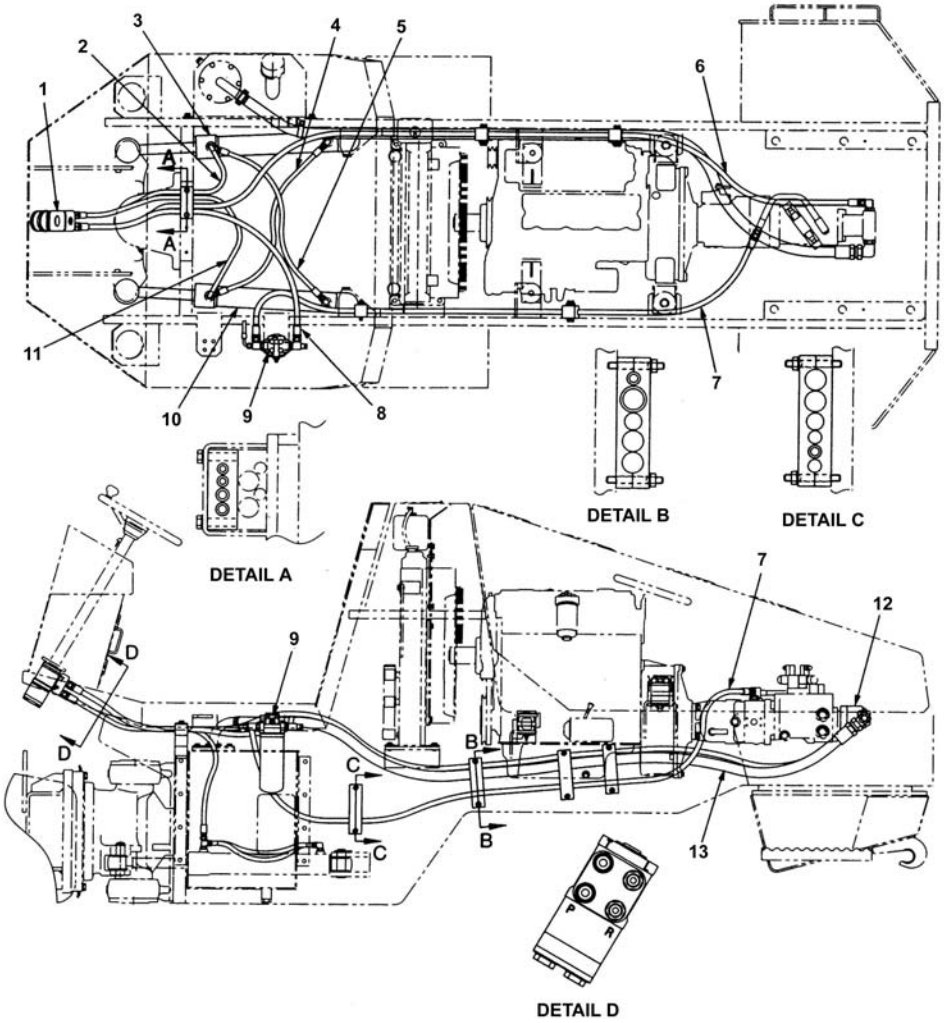

Steering Hoses

1. Orbitrol
2. Right turn high pressure hydraulic hose
3. Right steering cylinder
4. Left turn high pressure hydraulic hose
5. Right turn high pressure hydraulic hose
6. Feed hydraulic hose
7. Filter to propulsion pump hydraulic hose
8. Orbitrol to filter hydraulic hose
9. Line filter
10. Left steering cylinder
11. Left turn high pressure hydraulic hose
12. Steering pump
13. Suction hose.

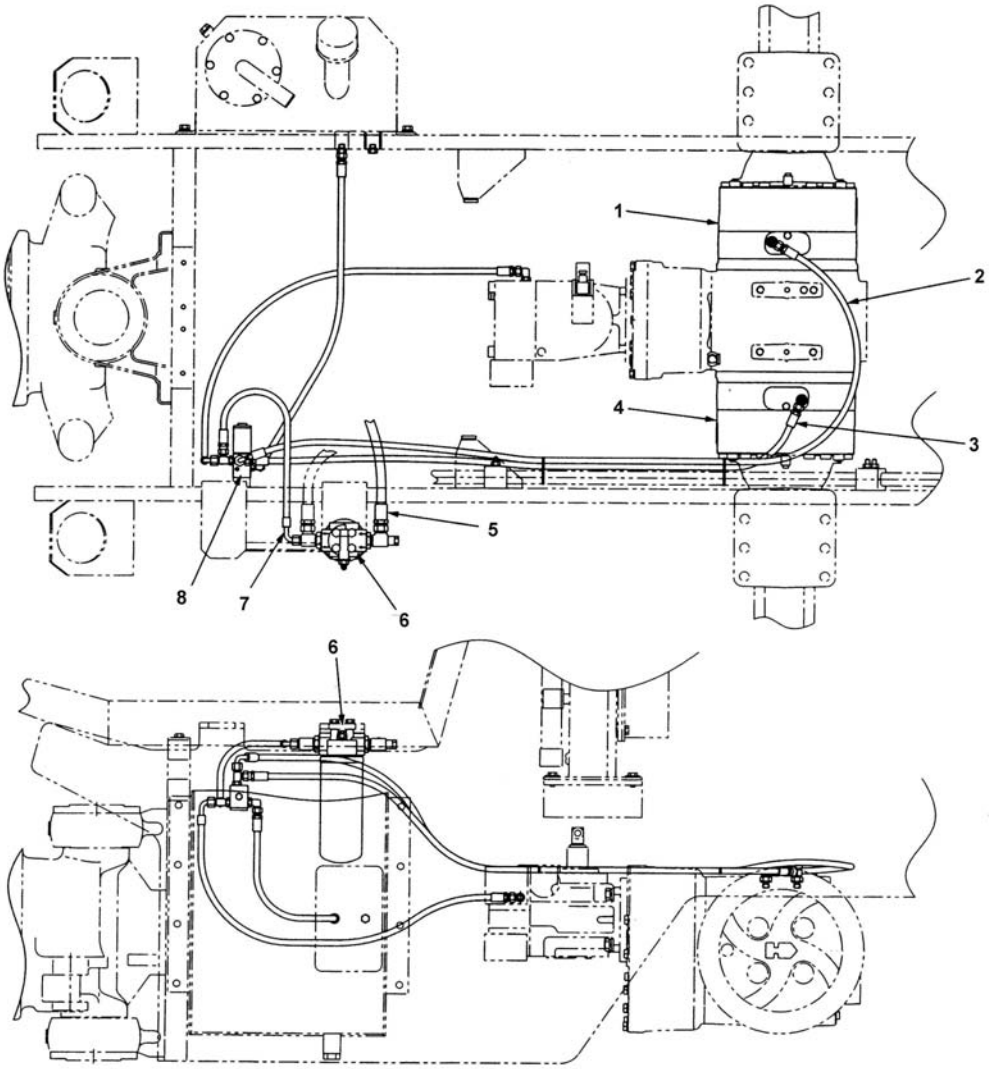

Hydraulic Brake Hose Network

1. Right disc
2. Brake valve to right brake disc hydraulic hose
3. Brake valve to left brake disc hydraulic hose
4. Left disc
5. Filter inlet charge hose
6. Hydraulic filter
7. Filter to brake valve hydraulic hose
8. Brake valve.

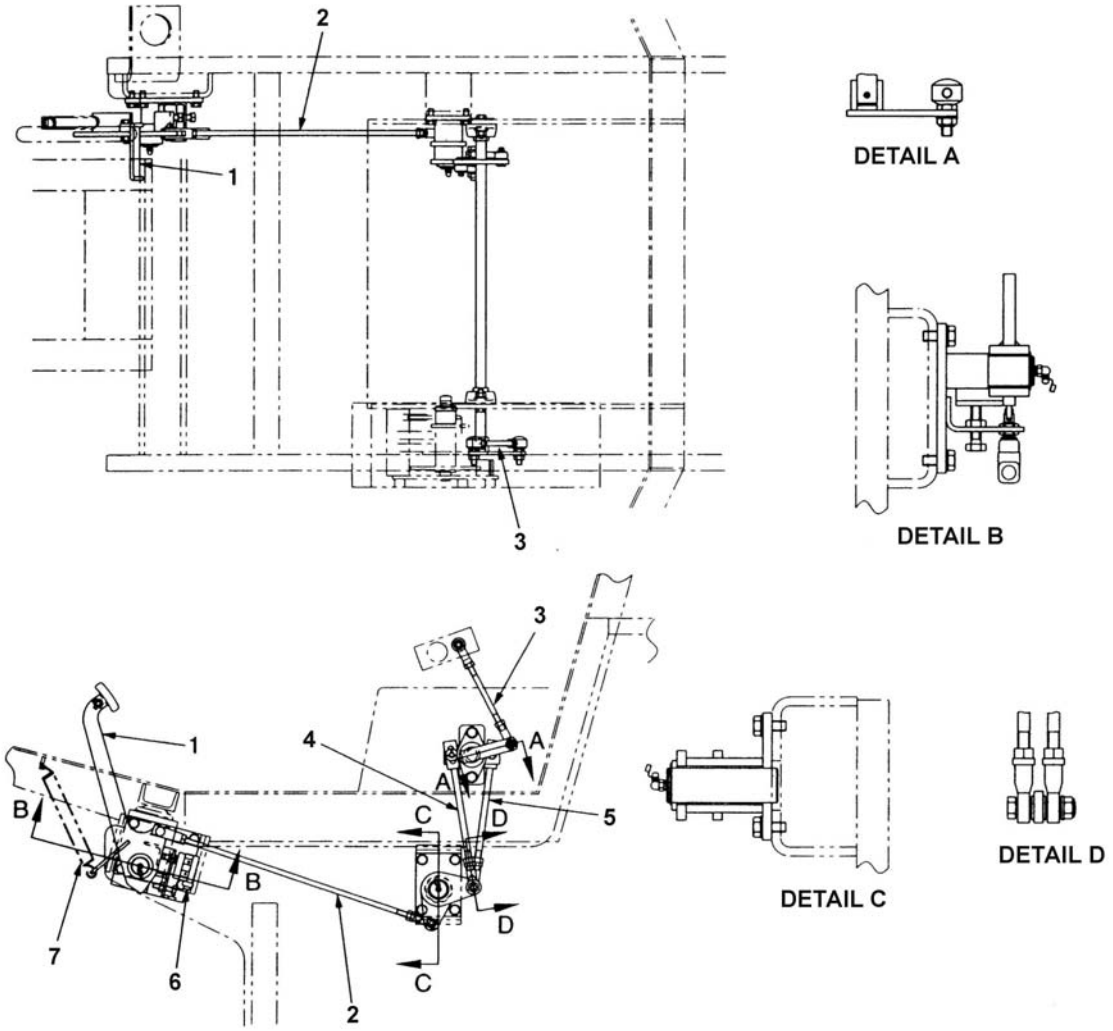

Brake Pedal and Linkage

1. Brake pedal
2. Rod
3. Forward/Reverse lever neutral rod
4. Forward/Reverse lever neutral rod
5. Forward/Reverse lever neutral rod
6. Foot brake switch
7. Return Spring.

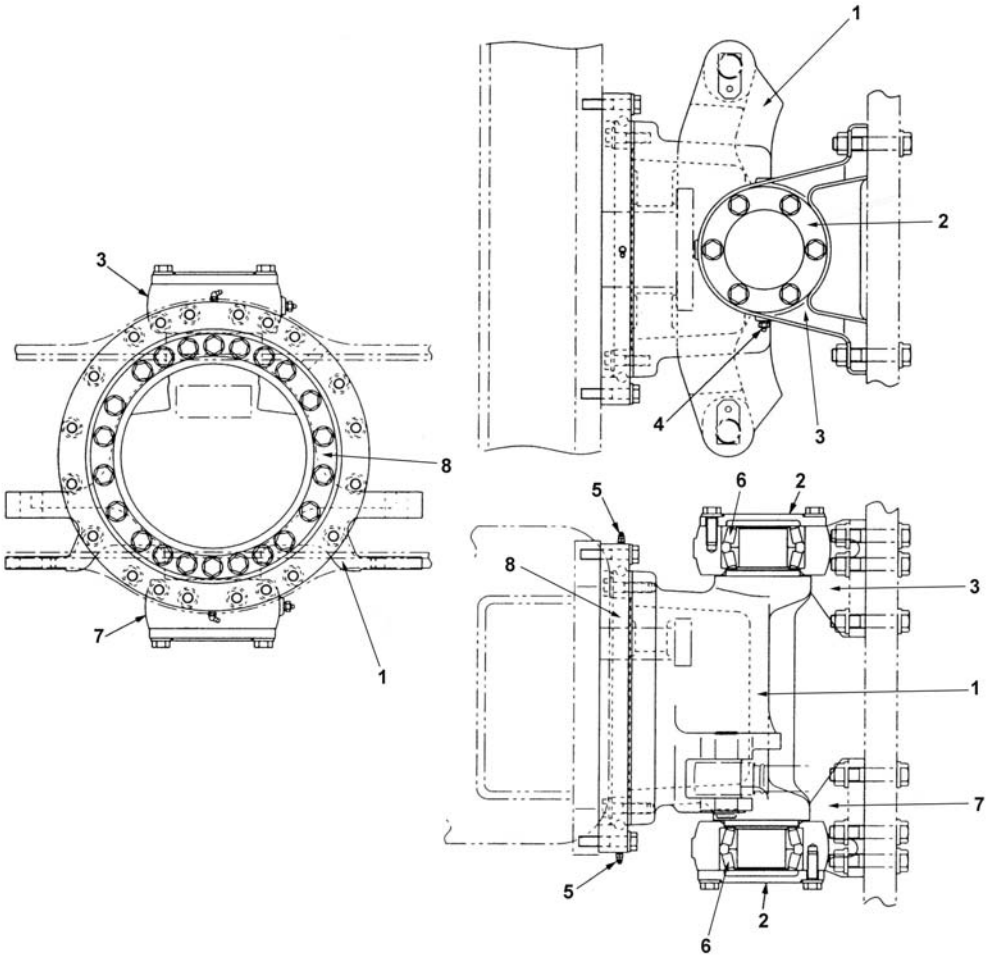

Center Pin

1. Yoke
2. Cover
3. Upper bracket
4. Grease fitting
5. Grease fitting
6. Roller bearing
7. Lower bracket
8. Bearing.

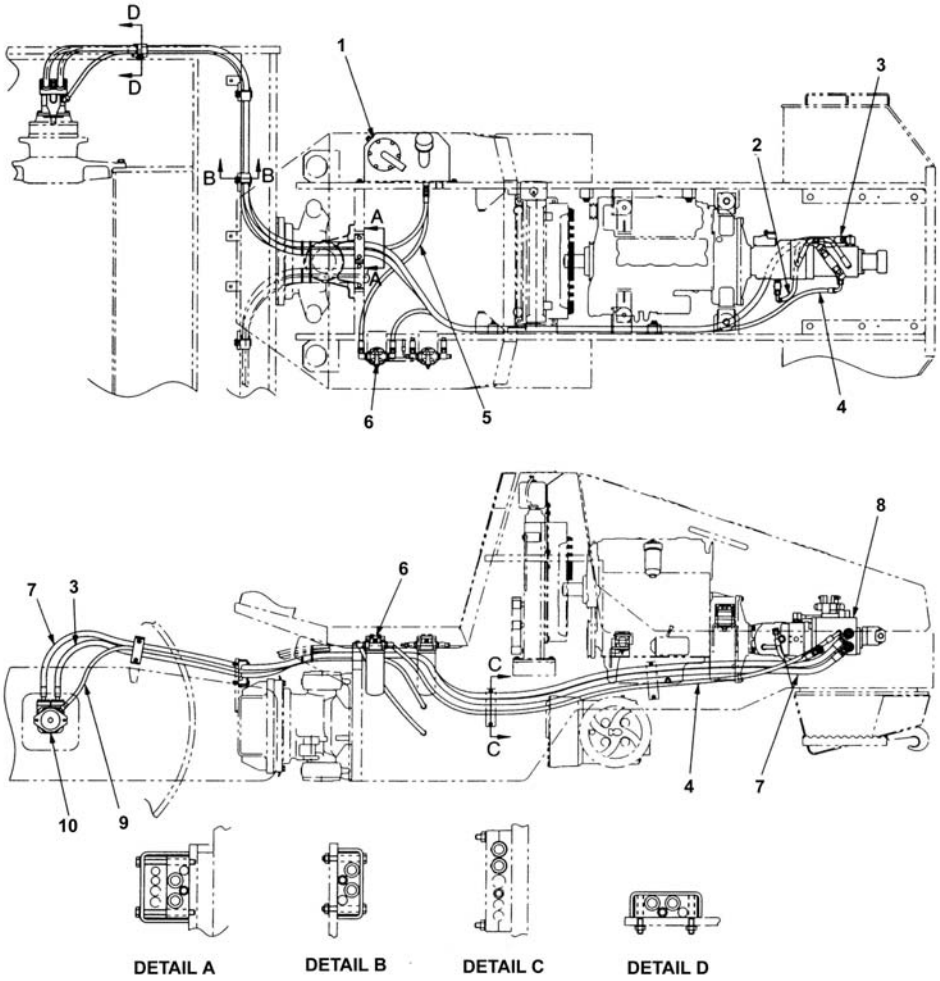

Vibrator Hydraulic Hoses

1. Hydraulic tank
2. Pump to pump hydraulic hose
3. High pressure hydraulic hose (port B)
4. Pump to filter hydraulic hose
5. Hydraulic filter to hydraulic tank hydraulic hose
6. Return hydraulic filter
7. High pressure hydraulic hose (port A)
8. Vibrator pump
9. Motor to tank hydraulic hose
10. Vibrator motor.

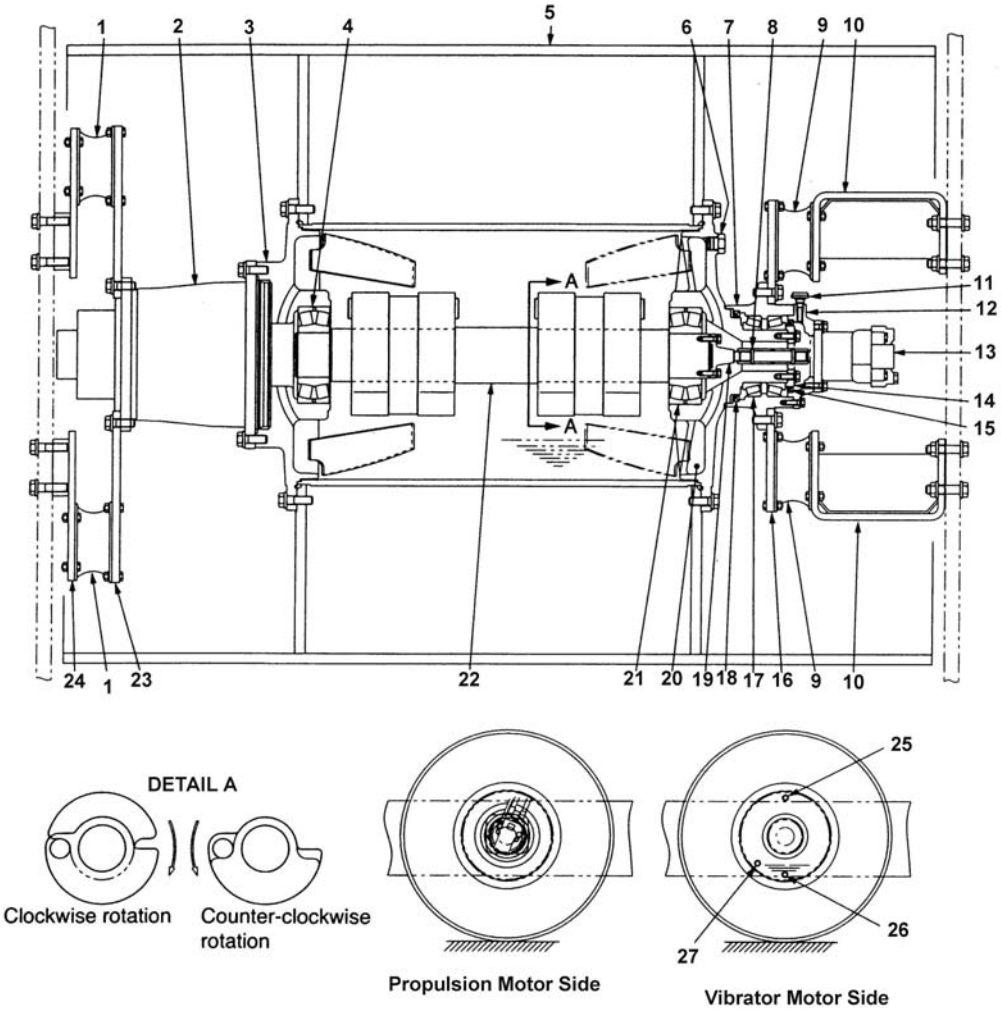

Drum and Vibrator (Model D)

1. Damper
2. Propulsion motor
3. Axel shaft
4. Roller bearing
5. Drum
6. Plug
7. Housing
8. Sleeve and spring pin
9. Damper
10. Holder
11. Breather
12. Cover
13. Vibrator motor
14. Cover
15. Oil seal
16. Disc
17. Roller Bearing
18. Oil seal
19. Shaft
20. Axle shaft
21. Roller bearing
22. Vibrator shaft
23. Disc
24. Holder
25. Oil fill plug
26. Drain plug
27. Level plug.

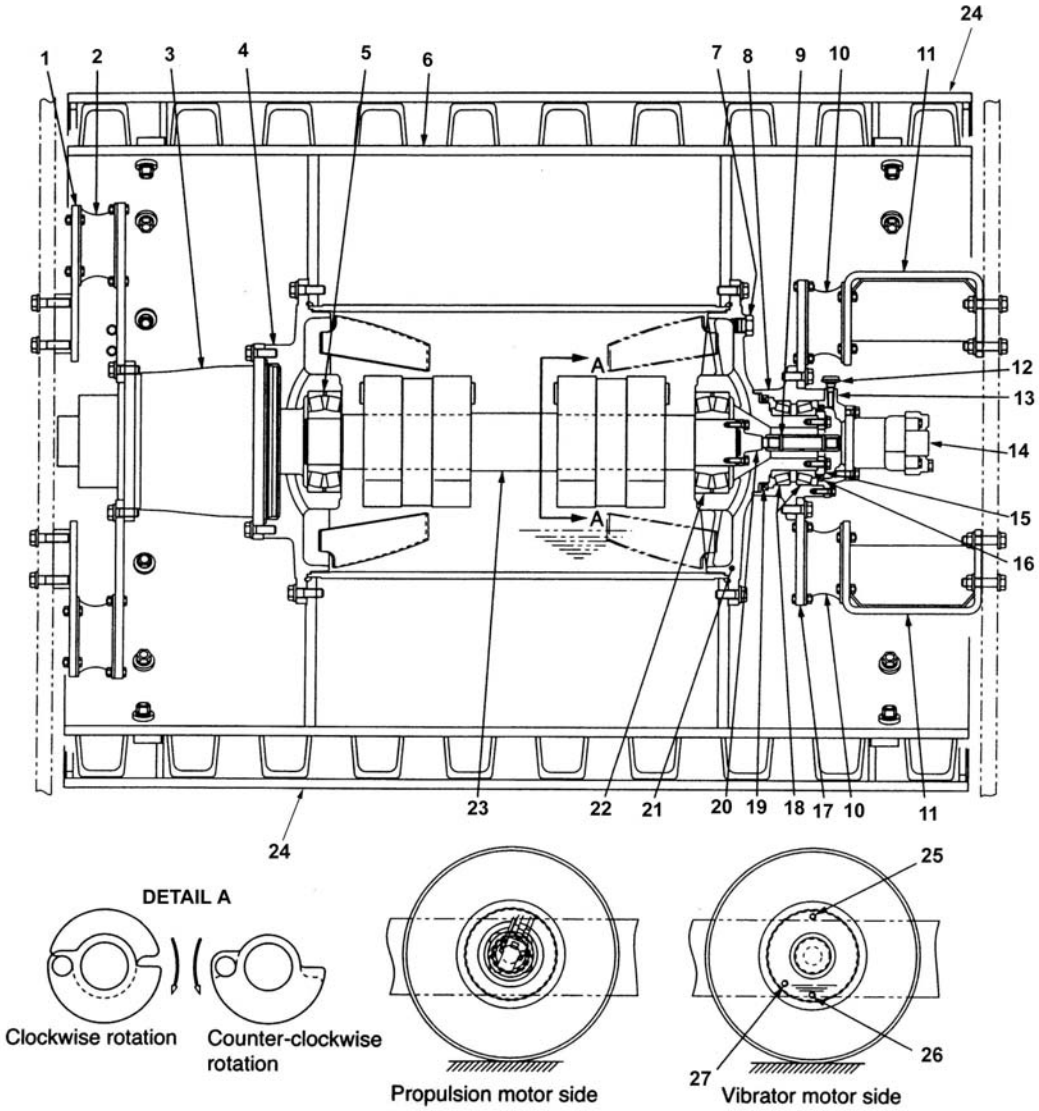

Drum and Vibrator Motor (Model T and TF)

1. Holder
2. Damper
3. Propulsion motor
4. Axle shaft
5. Roller bearing
6. Tamping drum
7. Plug
8. Housing
9. Sleeve and spring pin
10. Damper
11. Holder
12. Breather
13. Cover
14. Vibrator motor
15. Cover
16. Oil seal
17. Disc
18. Roller bearing
19. Oil seal
20. Shaft
21. Axle shaft
22. Roller bearing
23. Vibrator shaft
24. Flat drum (TF model only)
25. Oil fill plug
26. Drain plug
27. Level plug.

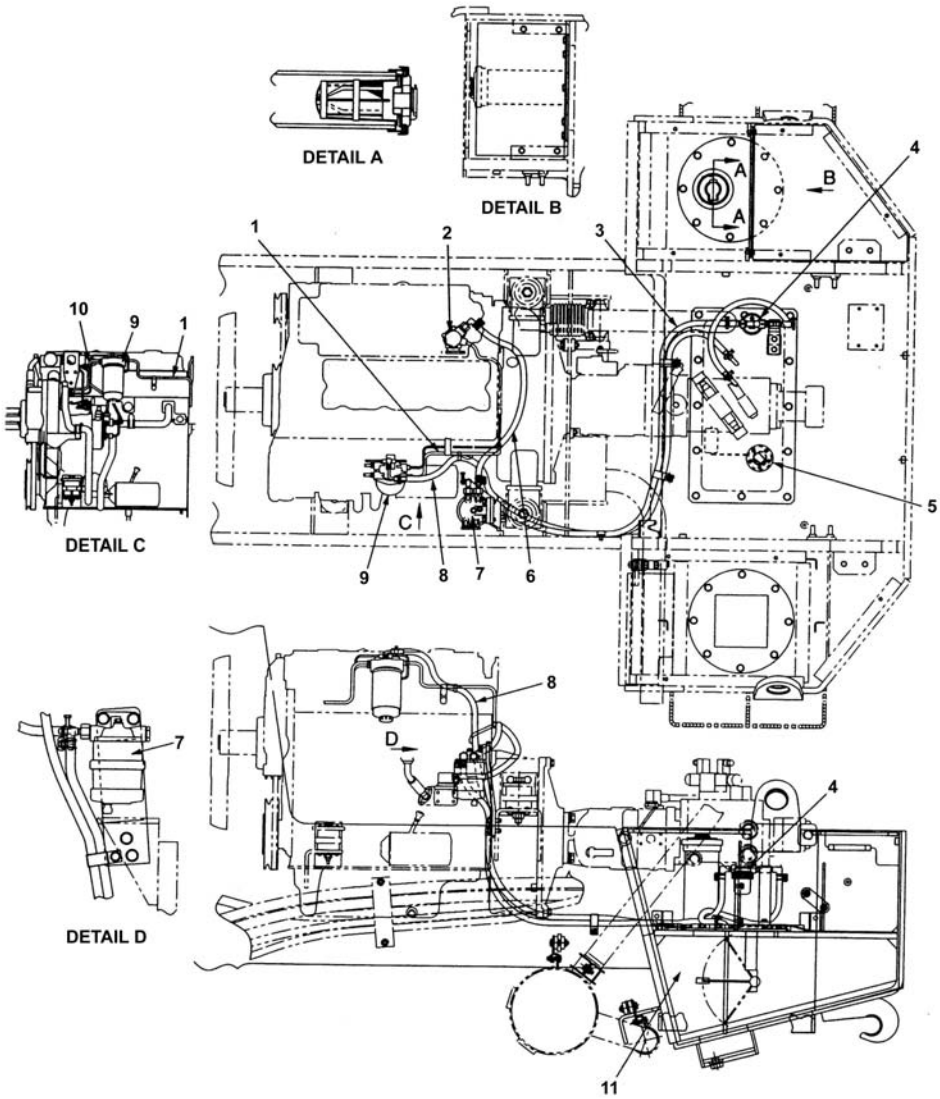

Fuel System

1. Feed pump to filter pipe
2. Feed pump
3. Fuel tank to sedimeter hose
4. Fuel filter
5. Fuel sending unit
6. Sedimeter to feed pump hose
7. Sedimeter
8. Tank hose
9. Fuel filter
10. Filter to injection pump pipe
11. Fuel tank.

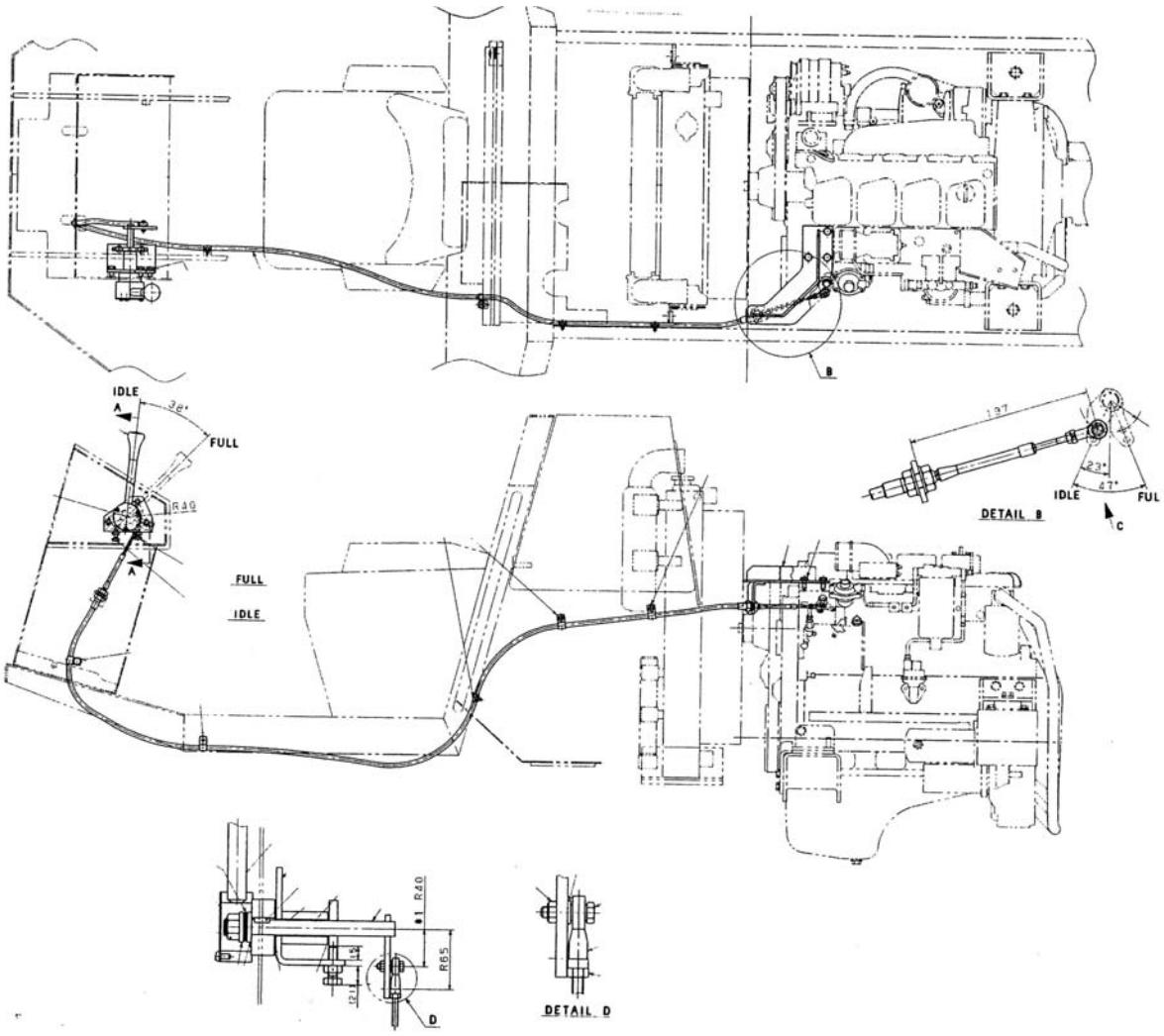

Fuel Controls

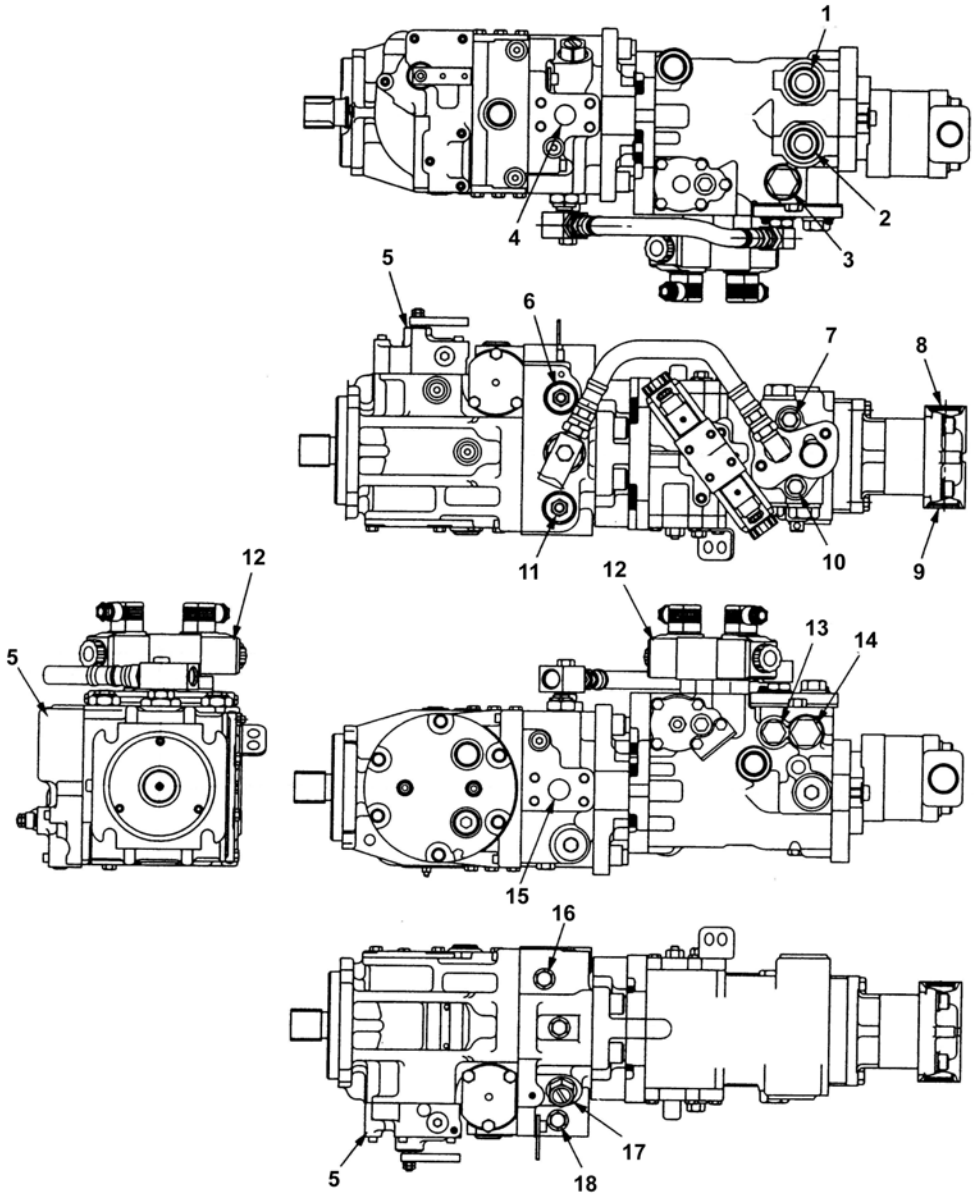

Hydraulic Propulsion, Vibrator and Steering Pump Assembly

1. Vibrator pump low amplitude port
2. Vibrator pump high amplitude port
3. Vibrator pump high-pressure relief port
4. Propulsion pump forward travel port
5. Propulsion pump control vale
6. Propulsion pump multi-function valve (B)
7. Vibrator pump high pressure gauge port
8. Steering pump delivery port
9. Steering pump suction port
10. Vibrator pump high pressure gauge port
11. Propulsion pump multi-function valve (A)
12. Vibrator pump amplitude selector valve
13. Vibrator pump charge relief valve
14. Vibrator pump high pressure relief valve
15. Propulsion pump reverse travel port
16. Propulsion pump circuit pressure gauge port (A)
17. Propulsion pump charge relief valve
18. Propulsion pump circuit pressure gauge port (B).

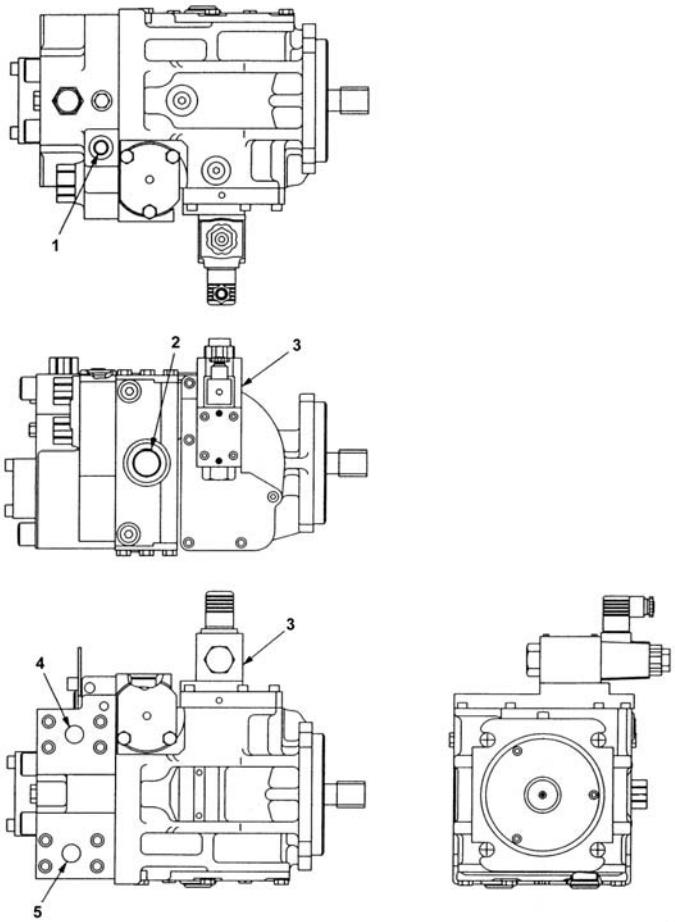

Rear Drive Propulsion Motor

1. Speed shift circuit port (operate servo piston)
2. Drain port
3. Speed select solenoid valve
4. Reverse travel port
5. Forward travel port.

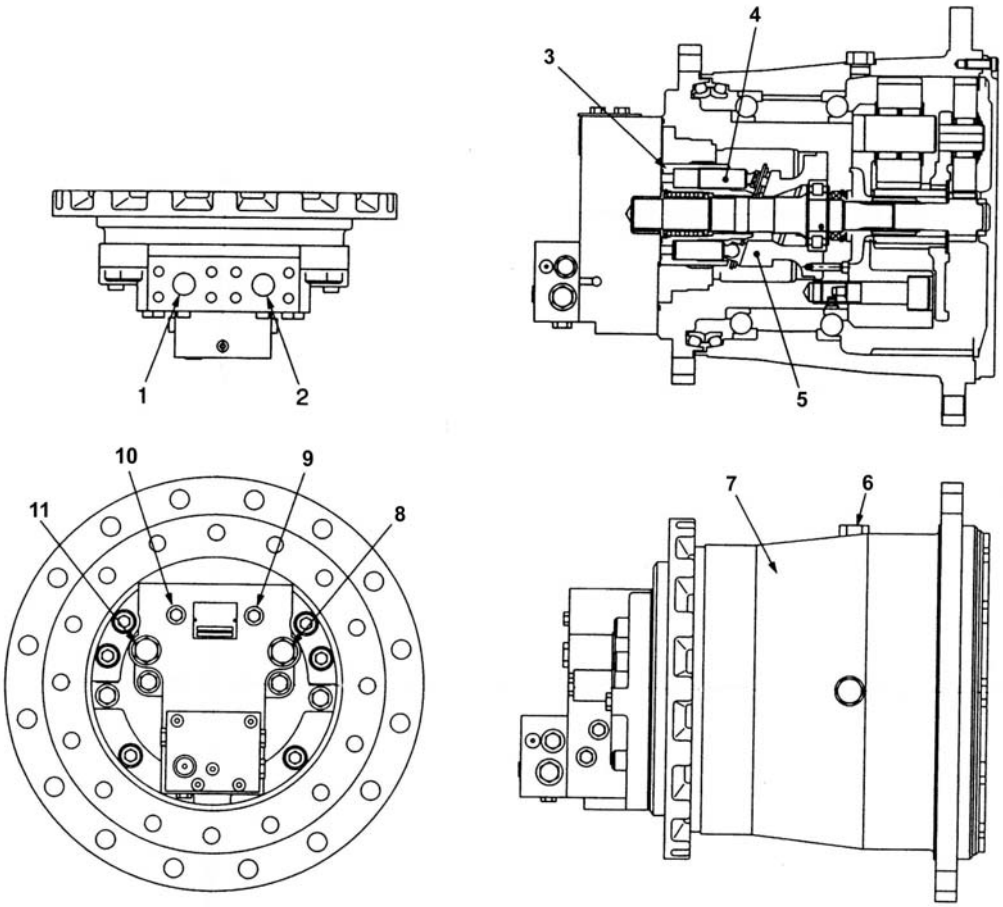

Front Drive Propulsion Motor

1. Forward travel port
2. Reverse travel port
3. Cylinder block
4. Piston
5. Swash plate
6. Fill hole
7. Reduction gear
8. Drain port
9. High pressure gauge port (B)
10. High pressure gauge port (A)
11. Drain port

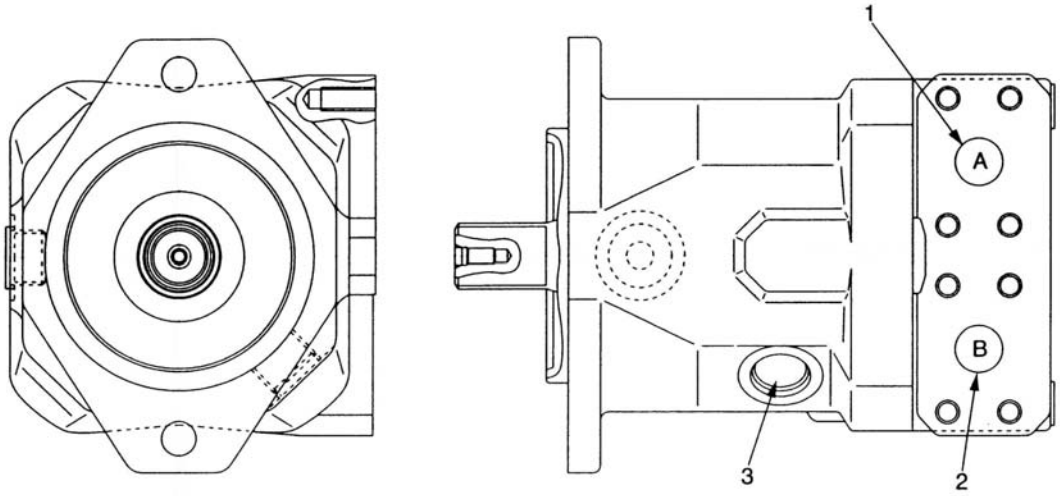

Vibrator Motor

1. Low side delivery port
2. High side delivery port
3. Drain port.

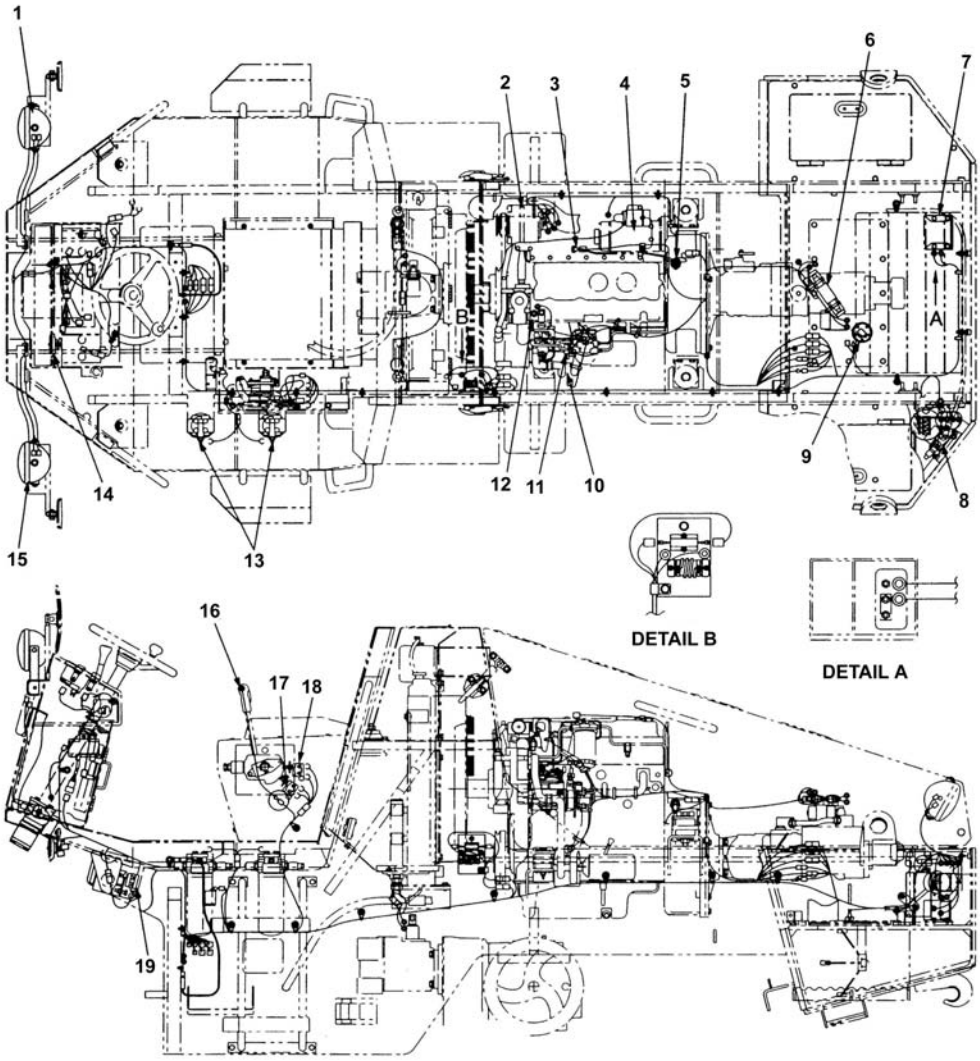

Electric Components

1. Right headlamp
2. Alternator
3. Intake air heater
4. Starter motor
5. Tachometer
6. Amplitude select switch
7. Back up alarm
8. Battery relay
9. Fuel tank
10. Engine oil pressure switch
11. Engine stop solenoid
12. Thermo unit
13. Filter switch
14. Horn
15. Left head lamp
16. Vibrator ON/OFF switch
17. Back up alarm switch
18. Interlock switch
19. Brake switch.

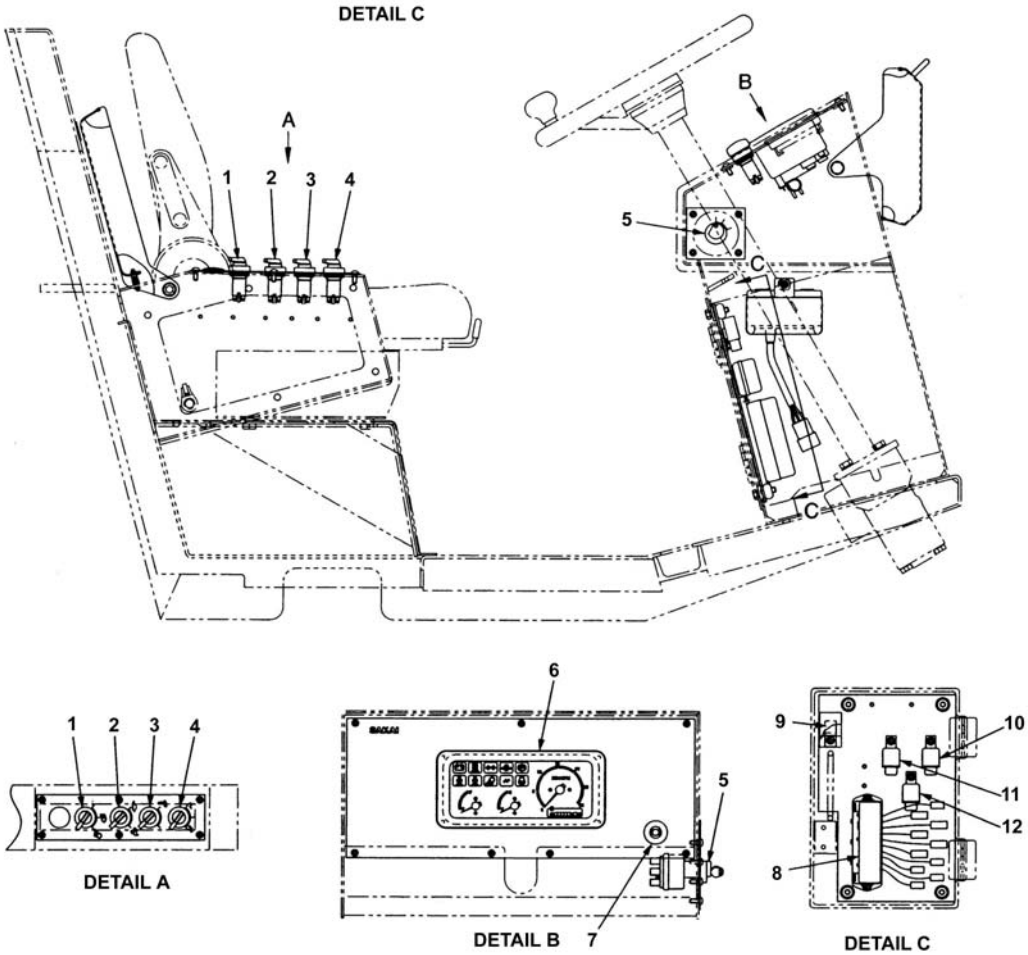

Instrument Panel and Relays

1. Lighting switch
2. Speed selector switch
3. CONT/MAN selector switch
4. Amplitude selector switch
5. Starter switch
6. Panel (combination meter)
7. Parking brake switch
8. Fuse box
9. Diode
10. Lamp check relay
11. Interlock relay
12. Horn relay.

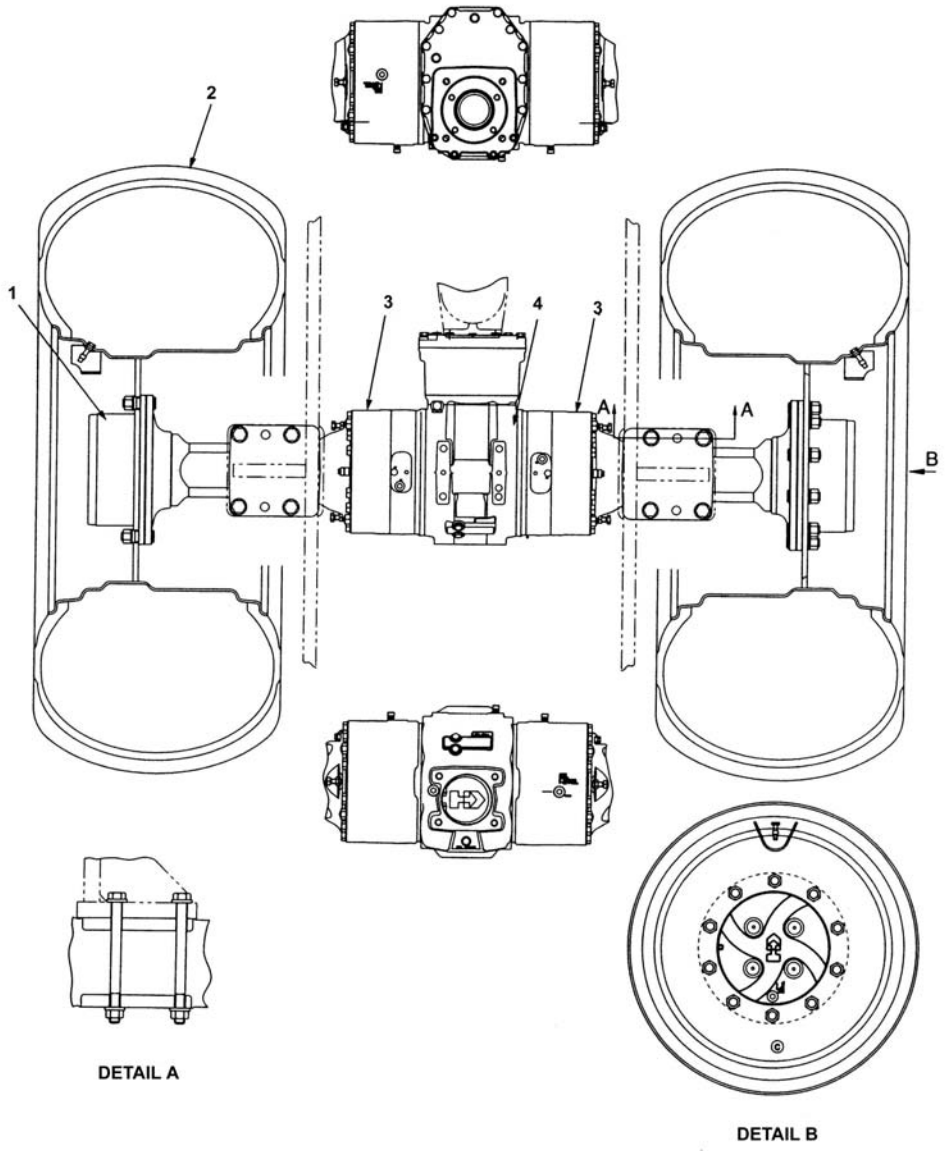

Rear Axle

1. Final drive
2. Tires
3. Brakes
4. Differential.

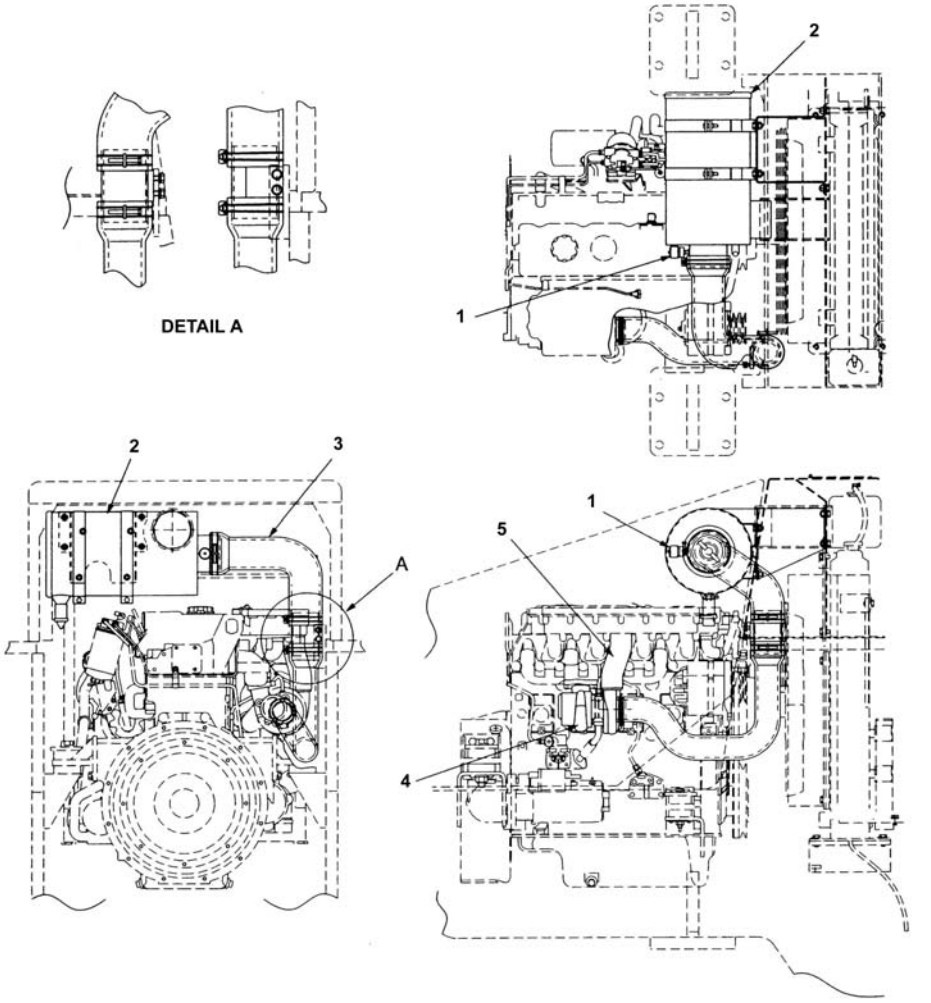

Intake System

1. Restriction indicator
2. Air cleaner
3. Intake hose
4. Turbocharger
5. Feed pipe.

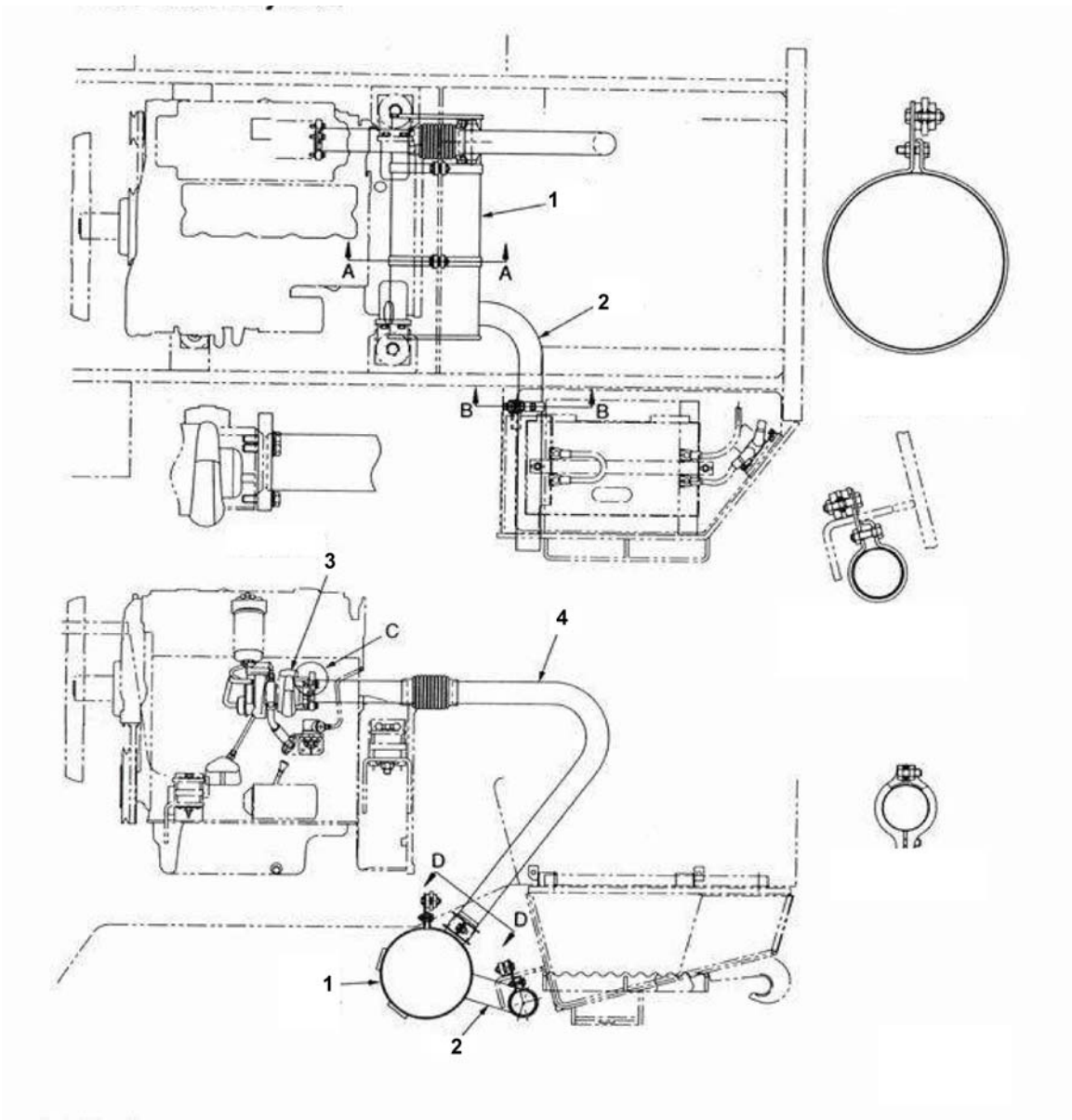

Exhaust System

1. Muffler
2. Exhaust pipe
3. Turbocharger
4. Exhaust pipe.

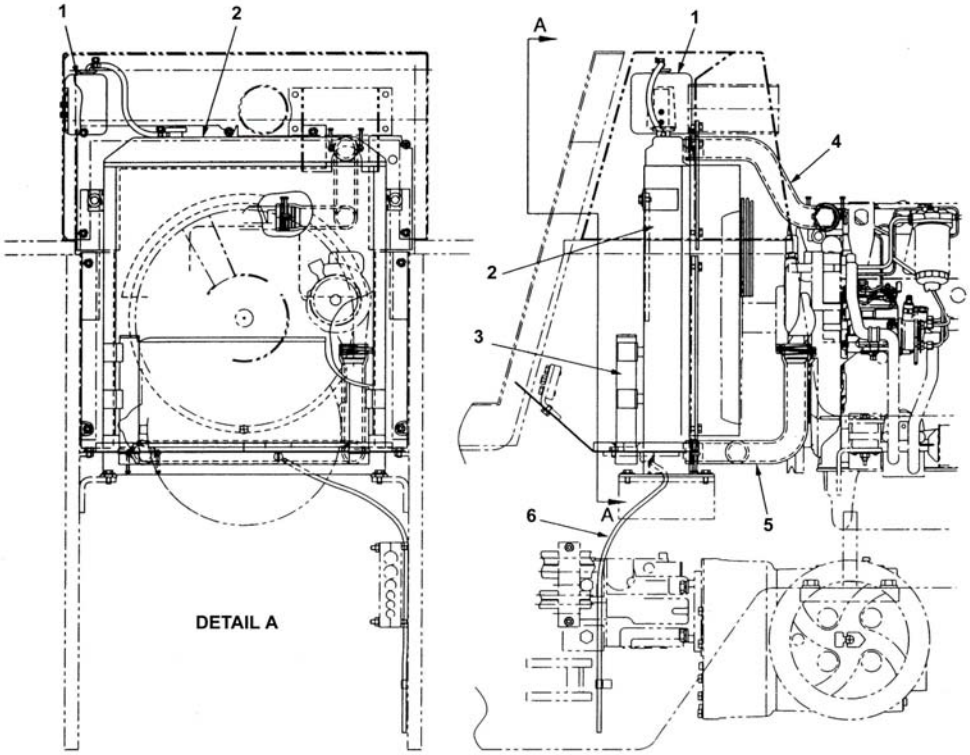

Cooling Hose and Radiator

1. Radiator overflow tank
2. Radiator
3. Oil cooler
4. Radiator inlet hose
5. Radiator outlet hose
6. Drain hose.

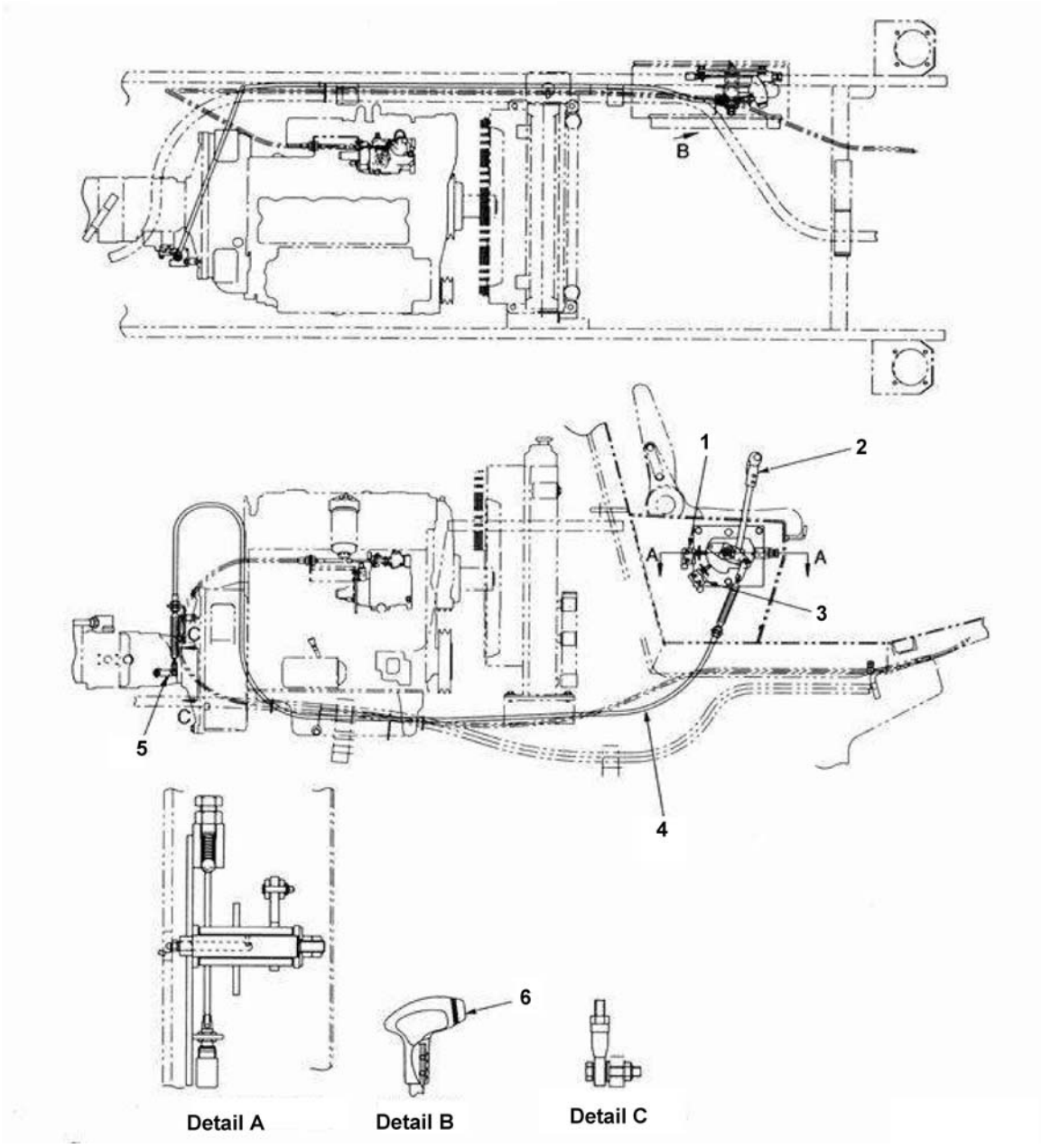

Travel Controls (Forward/Reverse)

1. Interlock switch
2. Forward/Reverse lever
3. Reverse alarm switch
4. Cable
5. Control lever
6. Vibrator switch.

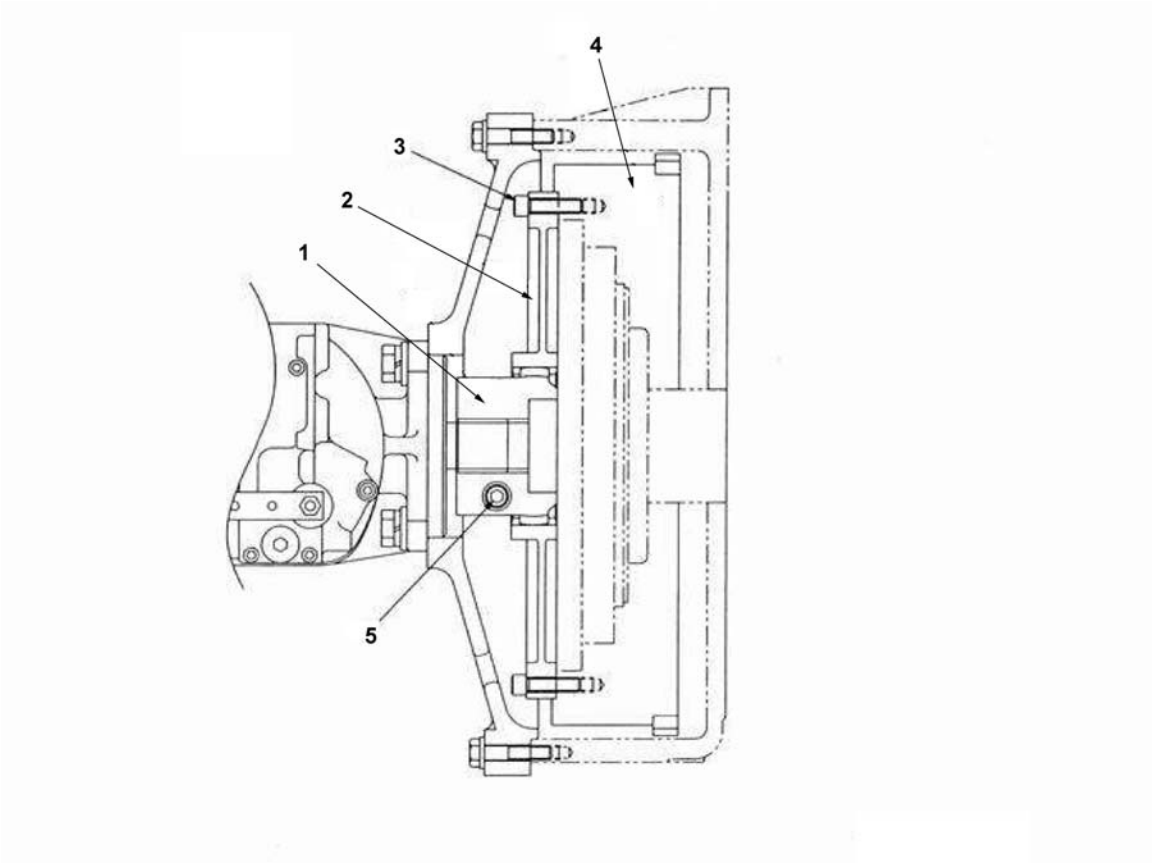

Hydraulic Coupling

1. Hub
2. Flange
3. Bolt
4. Flywheel
5. Bolt.

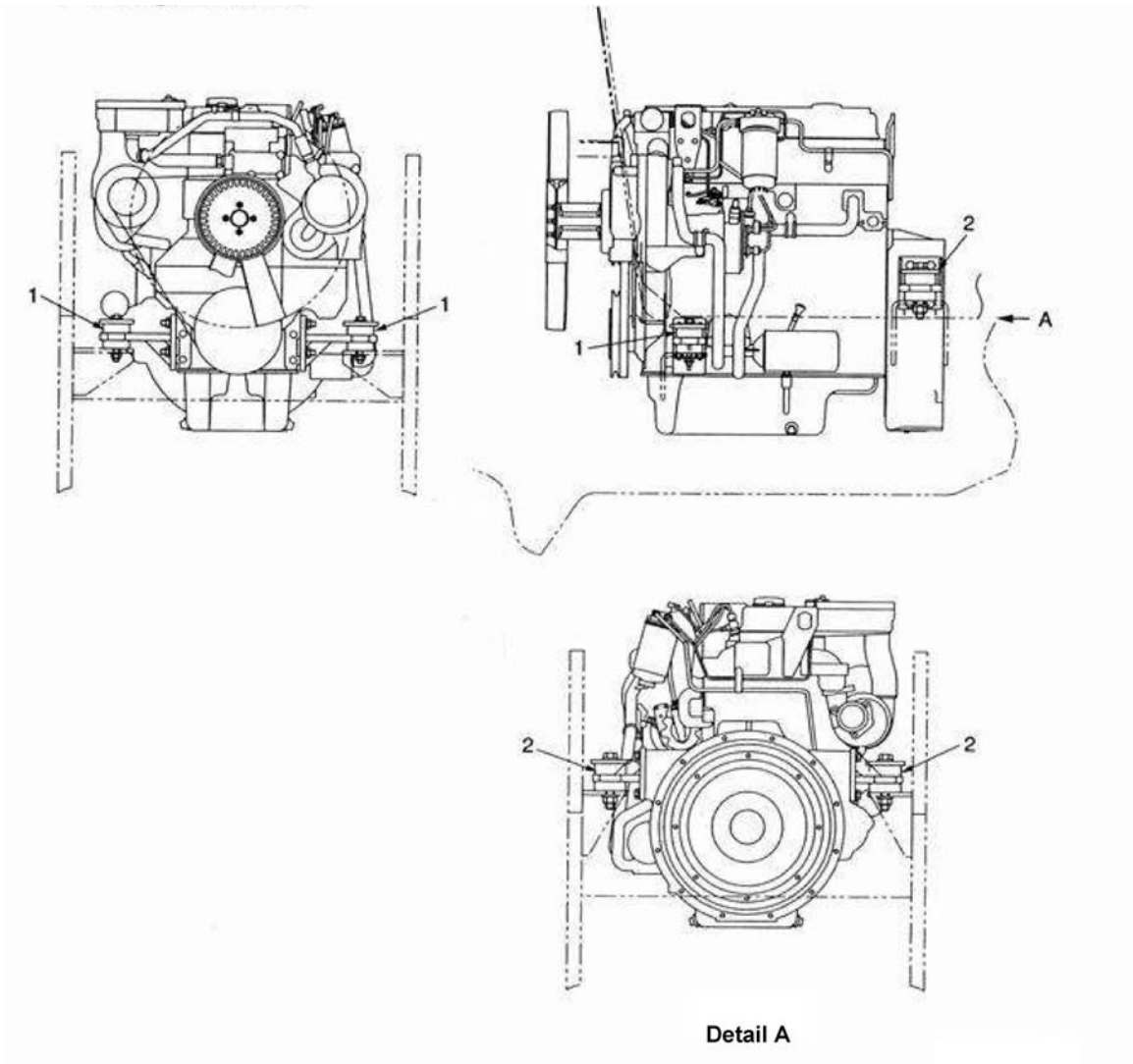

Engine Mount

1. Front engine mount
2. Rear engine mount.

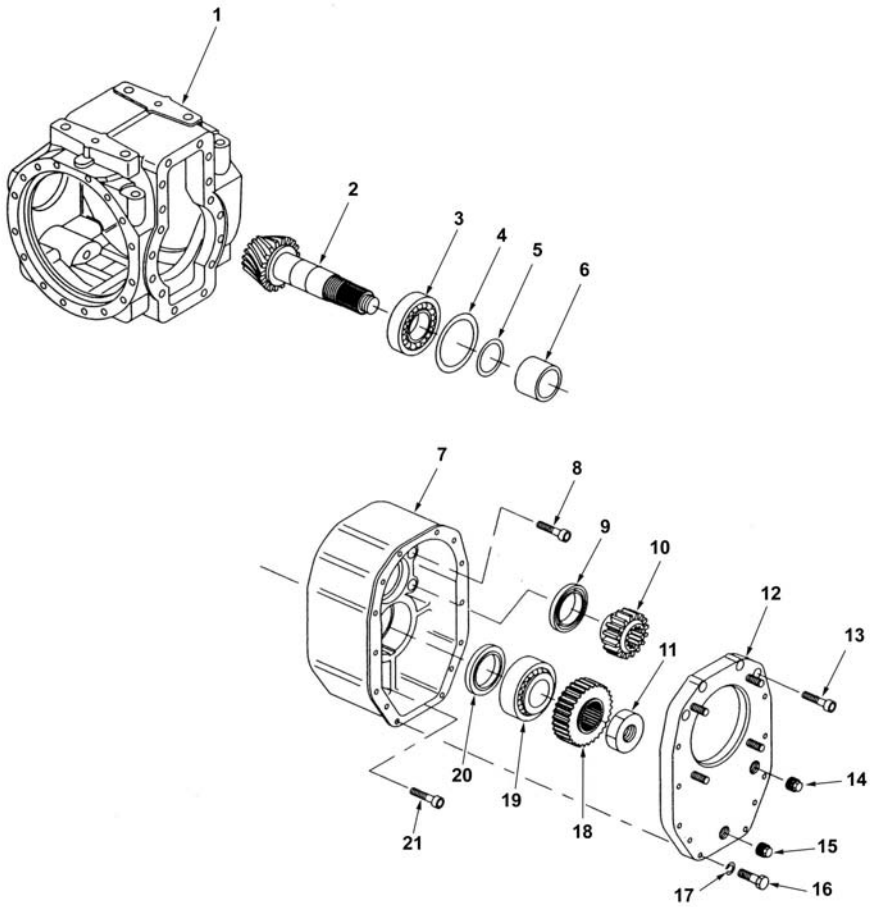

Differential (1 of 2)

1. Housing
2. Bevel pinion shaft
3. Bearing
4. Shim
5. Shim
6. Spacer
7. Housing
8. Bolt
9. Seal
10. Gear
11. Nut
12. Cover
13. Bolt
14. Plug
15. Plug
16. Bolt
17. Washer
18. Gear
19. Bearing
20. Seal
21. Bolt.

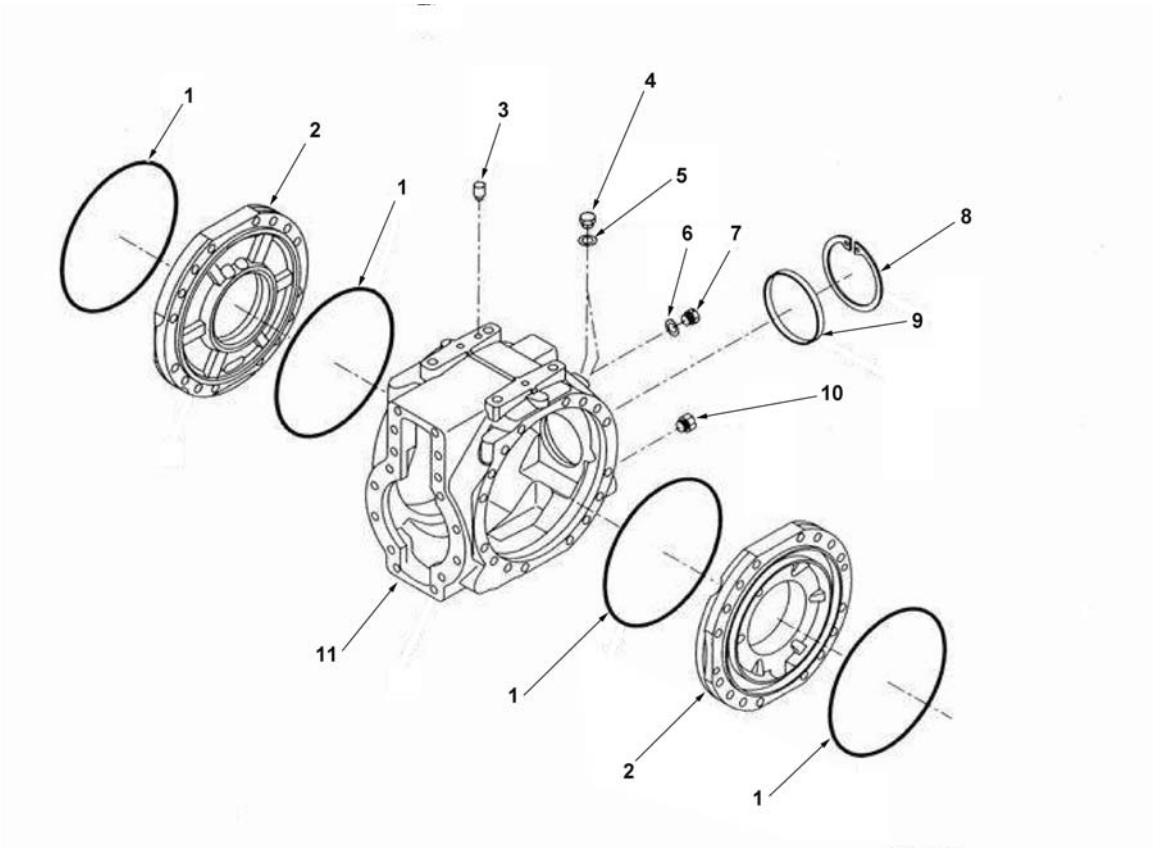

Differential (2 of 2)

1. O-ring
2. Cover
3. Vent
4. Bolt
5. Seal washer
6. Seal washer
7. Plug
8. Snap ring
9. Magnetic plug
10. Ring
11. Housing.

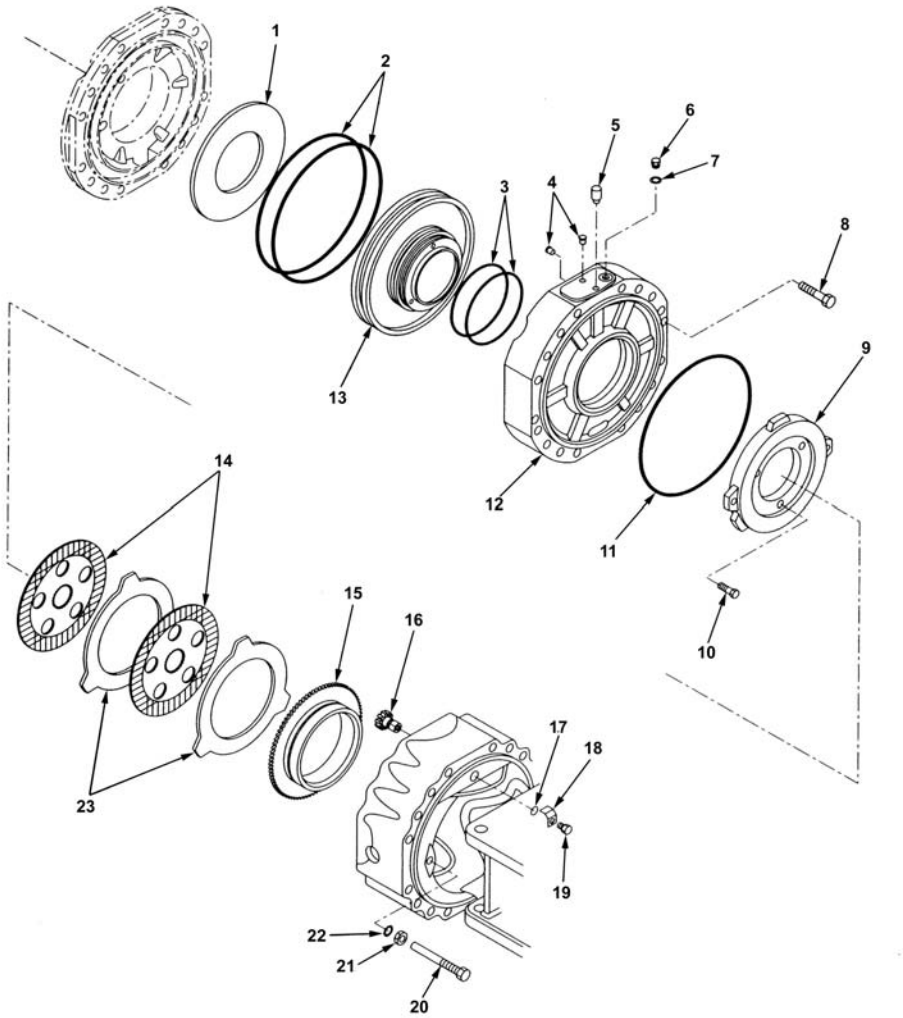

Brake

1. Spring
2. O-ring
3. O-ring
4. Grub bolt
5. Vent
6. Bolt
7. Seal washer
8. Bolt
9. Disc
10. Cylinder bolt
11. O-ring
12. Cover
13. Piston
14. Brake disc
15. Ring
16. Pinion
17. O-ring
18. Locking plate
19. Hexagon bolt
20. Bolt
21. Nut
22. Lock washer
23. Intermediate brake disc.

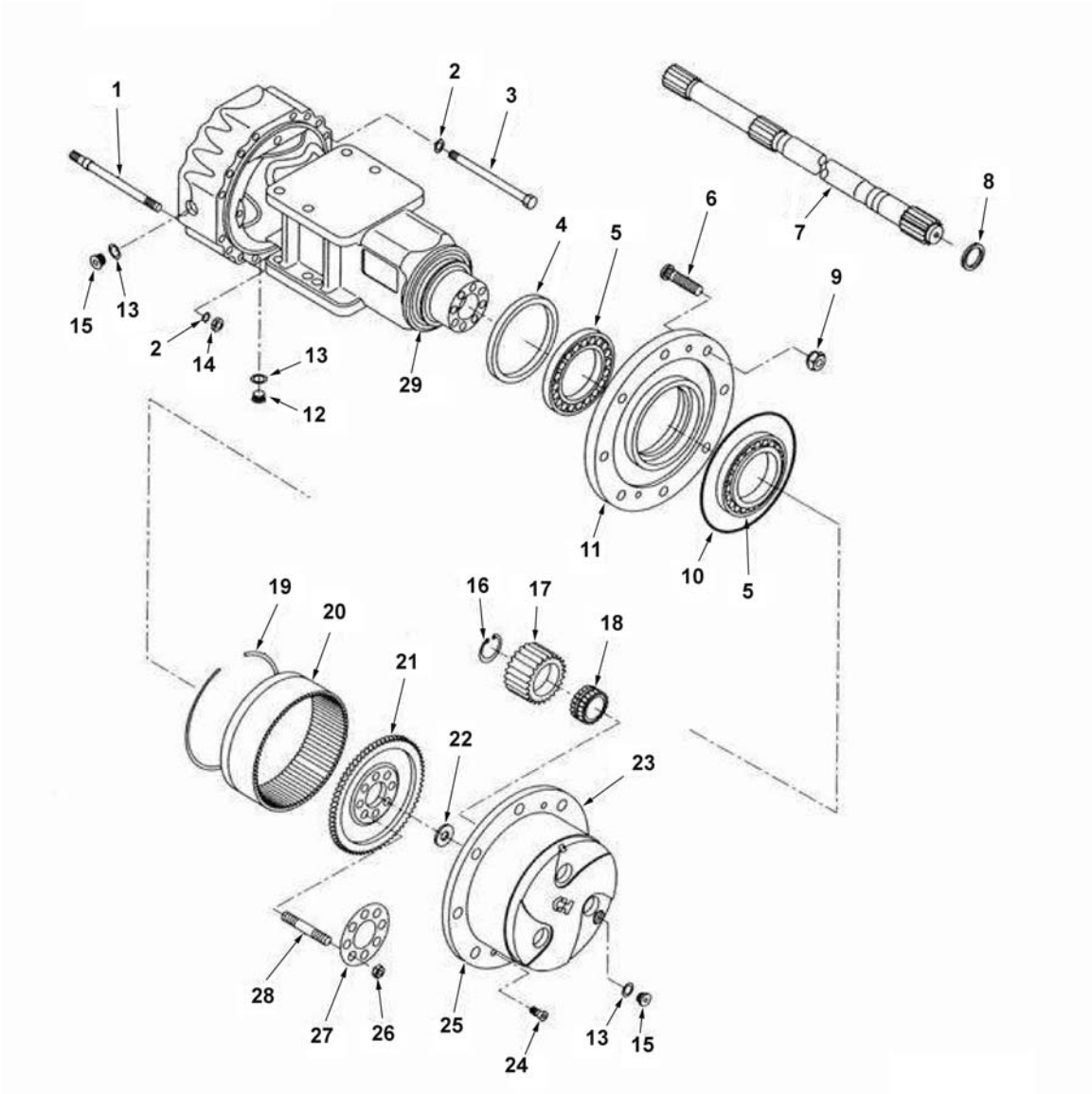

Final Drive

1. Stud
2. Spring washer
3. Bolt
4. Seal
5. Bearing
6. Wheel stud
7. Half shaft
8. Seal
9. Wheel nut
10. O-ring
11. Wheel hub
12. Magnetic plug
13. Seal washer
14. Nut
15. Plug
16. Ring
17. Planetary gear
18. Bearing
19. Circlip
20. Ring gear
21. Ring gear support
22. Friction washer
23. Planetary carrier gear
24. Countersunk bolt
25. Planetary gear carrier
26. Nut
27. Locking plate
28. Stud
29. Axel case.

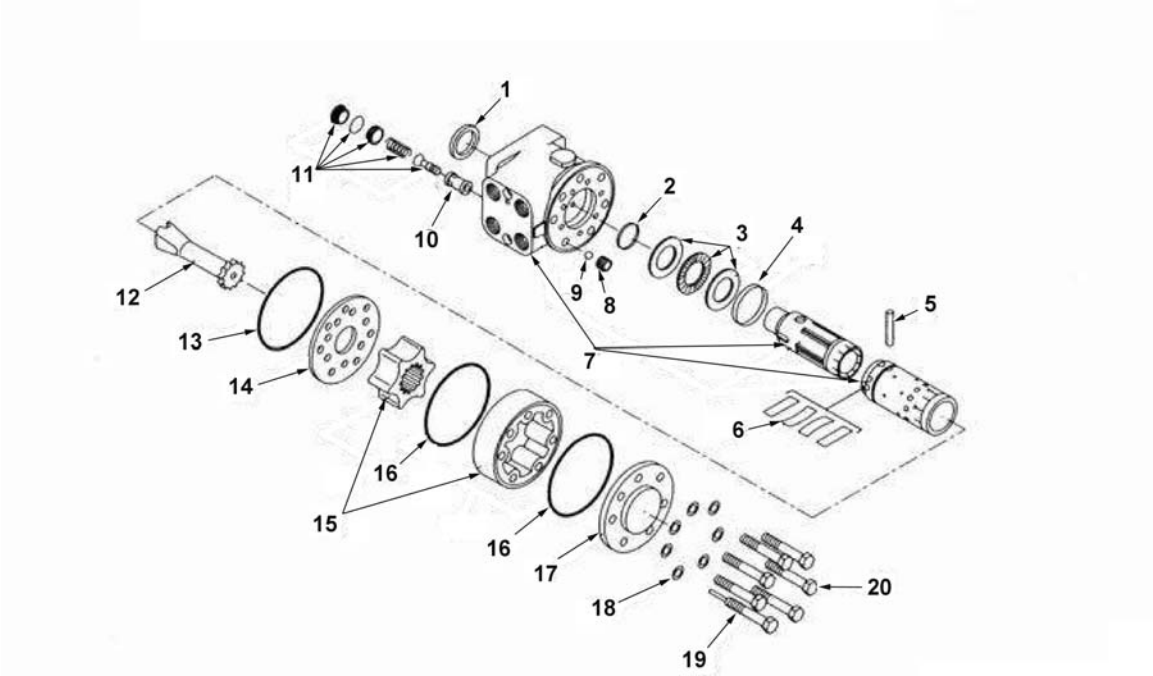

Orbitrol

1. Dust seal ring
2. Lip-seal
3. Bearing assembly
4. Ring
5. Cross pin
6. Spring set
7. Housing, spool and sleeve (not supplied separately)
8. Thread bushing
9. Ball
10. Housing, spool and sleeve (not supplied separately)
11. Complete relief valve without seat
12. Cardan shaft
13. O-ring
14. Distributor shaft
15. Gearwheel set
16. O-ring
17. End cover
18. Washer
19. Screw with pin
20. Screw.

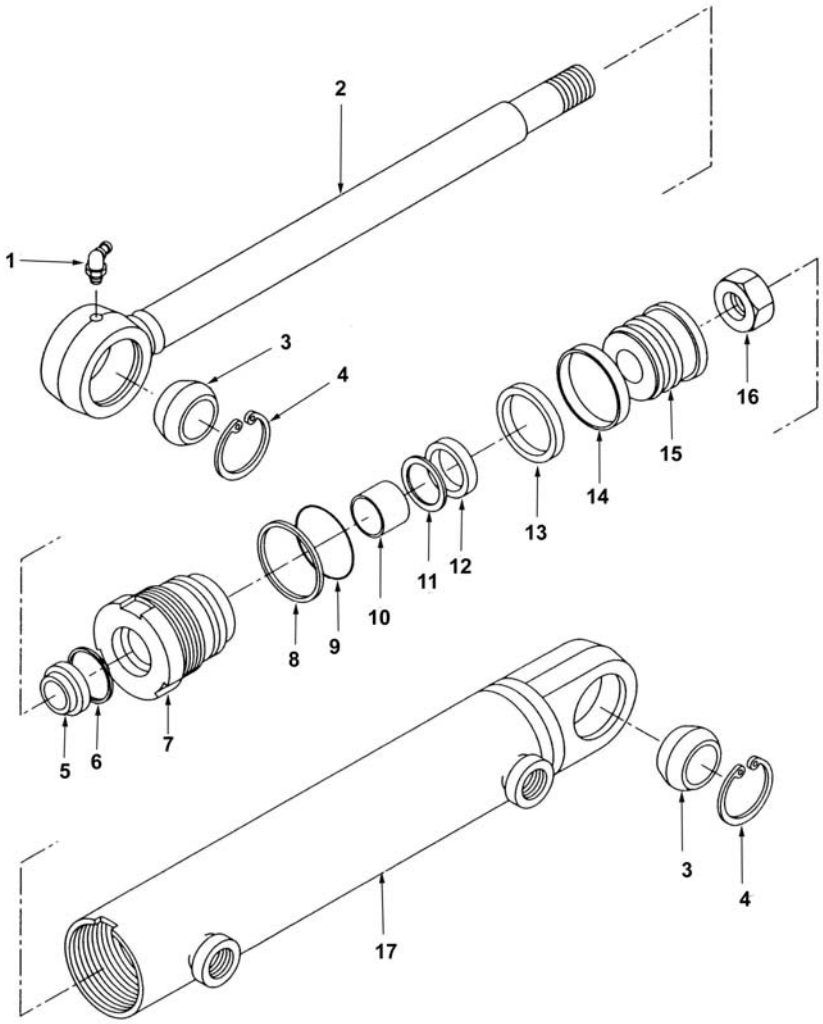

Steering Cylinder

1. Grease fitting
2. Piston rod
3. Spherical bearing
4. Ring
5. Dust seal
6. Stopper
7. End cap
8. Back up ring
9. O-ring
10. Bushing
11. Back up ring
12. U-Packing
13. Slipper seal
14. Wear ring
15. Piston
16. Nut
17. Tube assembly.

Operating Systems Description

The SV505 compactor series is comprised of the following operating systems:

- Diesel Engine
- Hydraulic Drive System
- Hydraulic Vibratory System
- Hydraulic Steering System
- Brake System
- Operating Controls.

All of the above listed systems integrate together and allow the compactor to operate as designed. This procedure will define the systems and provide a description of the components of each system.

Diesel Engine

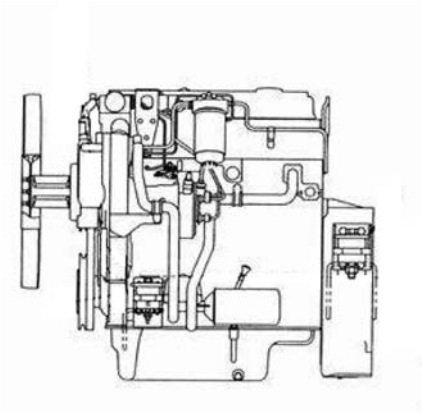

Cummins® Diesel Engine

The SV505 compactor is powered by a Cummins® QSB4.5 turbocharged diesel engine. The engine is an electronic controlled engine. The ECM (electronic control module) controls engine fueling while providing system and diagnostic information.

The system information can be transmitted to items such as the tachometer, coolant temperature gauge, oil pressure gauge, etc.

The diagnostic information (fault codes) can be accessed through an electronic service tool or through a fault lamp.

The electronic service tool software is only available through Cummins® Inc.

The compactor is equipped with a fault lamp that will flash fault codes. The fault codes can be up to 4 digits long. The ECM will transmit the fault code data to the lamp one digit at a time with approximately a 1 second delay between digits. After the final digit is flashed out, a short time will elapse, approximately 3 seconds, and the fault code will repeat.

To view additional fault codes the increment/decrement switch (located in the dash riser) can be used to view the next fault code.

For a complete list of manuals and wiring diagrams to service, repair and maintain the engine. refer to the Required Service Literature procedure in this manual.

Hydraulic Drive System

The diagram below illustrates the drive system for the SV505 compactor:

1. Engine
2. Coupling
3. Propulsion pump assembly
   a. Control valve
   b. Charge relief valve
   c. Servo cylinder
   d. High pressure relief valve
   e. Check valves
4. Vibrator pump
5. Steering pump
6. Rear propulsion motor
   f. Speed selector valve
   g. Flushing valve
   h. Low pressure relief valve
7. Rear axle assembly
   i. Reduction gear
   k. Final drives
   m. Tires
   n. Brakes
8. Brake valve
9. Unloader valve
10. Orbitrol
    o. Relief valve
11. Line filter
12. Oil cooler
13. Return filter
14. Suction filter
15. Drum
16. Propulsion motor
    p. Reduction gear.

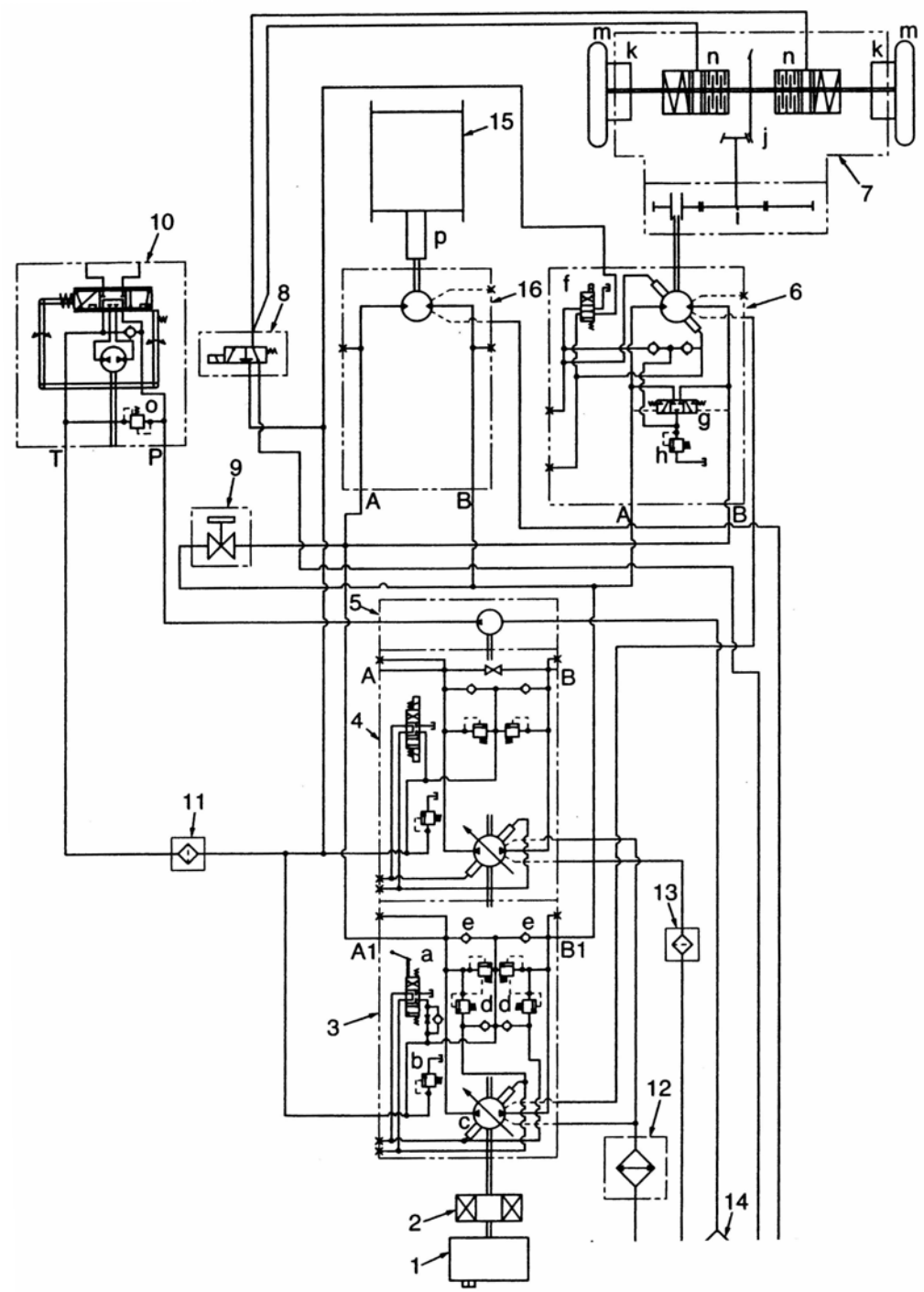

Hydraulic Drive Circuit
The hydraulic propulsion is comprised of the following items:

- Propulsion pump (3)
- Rear propulsion motor (6)
- Front propulsion motor (16)
- Rear axel assembly (7)
- Drum (15)
- Brake valve (8).

NOTE: The reference numbers (*) are used in the hydraulic drive circuit on the preceding page.

Propulsion Pump
The propulsion pump is a variable pump. The flow is increased or decreased by varying the angle of the swash plate located in the pump. The angle of the swash plate affects piston stroke. This allows the operator to move the compactor from forward to neutral and neutral to reverse.

Propulsion Motor
The front propulsion motor is a fixed displacement hydraulic motor. The piston stroke is not variable. The rear propulsion motor is a two speed motor. Controlling the angle of the swash plate varies the piston stroke.

Operation
It is assumed the compactor is operating in the forward direction and the parking brake is released.

- Moving the forward reverse lever forward places the pump servo valve (a) into operation. The servo piston (c) tilts the pump swash plate in the forward direction.
- The propulsion pump (3) discharges hydraulic oil from port (B1). The oil flows into two lines:
    - One hydraulic hose connects to the forward travel of the rear motor (6)
    - The remaining hydraulic hose connects to the forward travel of the front motor (16).
- The hydraulic oil exits the front and rear motors, flowing from the opposite ports, and flows into the suction port in the propulsion pump. In addition part of the oil is drained to the tank through the flushing valve (g), low-pressure relief valve (h) and motor casing.
- The power from the rear motor (6) is delivered to the tires through the reduction gear (i), located in the rear axel assembly (7), the reduction mechanism in the differential (j) and final drives (k).
- The power from the front motor (16) is conveyed through the reduction gear (p) to the drum (15).

Compactor Speed Selection
It is assumed the speed is selector switch set to the turtle icon and operator is moving to the rabbit icon.

- The rear motor (6) uses a speed select solenoid valve (f). Setting the selector switch to the rabbit icon routes pressurized oil from the valve to the piston (i) in the speed shift mechanism.
- The swash plate in the rear drive motor is moved to reduce the piston stroke. The motor delivery is reduced approximately by ⅓.
- The decrease in displacement increases the vehicle speed while the pump delivery remains constant.

High-Pressure Circuit Protection
A relief valve is located in the propulsion pump (3). The relief valve will open if pressures exceed specifications.

Charge Circuit
The propulsion circuit is a closed loop circuit that allows hydraulic oil to be circulated into it if a deficiency occurs.

- Hydraulic oil from the steering pump (5) flows into the steering valve, Orbitrol (10), through the filter (11) to the propulsion pump (3).
- The propulsion pump (3) charge relief valve (b) maintains pressure to operate the pump swash plate when the forward/reverse lever is in the neutral position. When compactor is moving the propulsion motor (6) relief valve (h) allows the oil to re-circulate.

Hydraulic Vibratory System

The diagram below illustrates the vibratory system for the SV505 compactor:

1. Engine
2. Coupling
3. Propulsion pump assembly
4. Vibrator pump
    - a Amplitude select valve
    - b Charge relief valve
    - c High pressure relief valves
    - d Check valves
5. Steering pump
6. Vibrator motor
7. Vibrator
8. Orbitrol
9. Charge circuit hydraulic filter
10. Return hydraulic filter
11. Suction hydraulic filter.

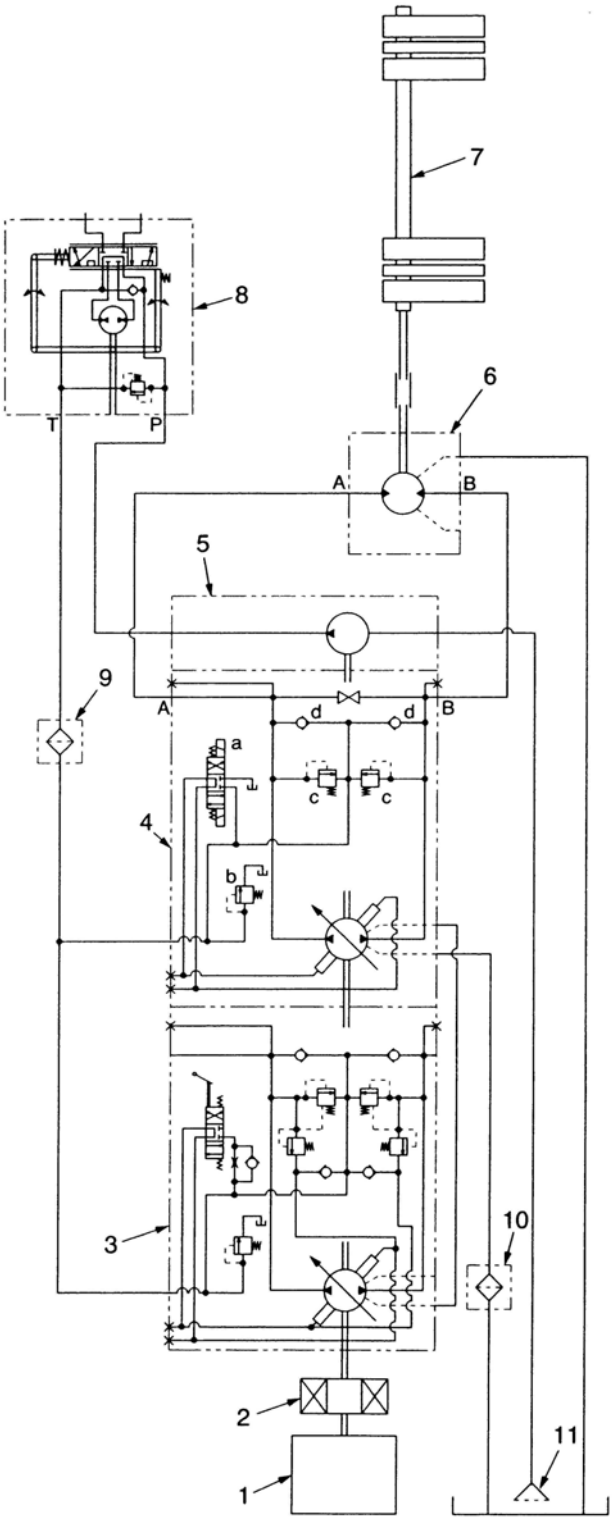

Hydraulic Vibratory Circuit

The vibratory system is comprised of the following components:

- Vibrator pump (4)
- Vibrator motor (6)
- Vibrator (7).

Vibrator Pump

A variable displacement pump is used for the pump. Changing the pump swash plate angle varies the piston stroke to allow for the selection of low amplitude, neutral and high amplitude.

Vibrator Motor

The vibrator motor is a fixed displacement motor. The displacement of the motor is not variable. The shaft turns at one speed depending on the oil flow that is supplied to it.

Operation

It is assumed that high amplitude is selected:

- The amplitude selector switch actuates the vibrator pump (4), amplitude select valve (a) to discharge hydraulic oil from the high amplitude port on the pump.
- Hydraulic oil routed from the pump into the high amplitude port of the vibration motor. The hydraulic oil then is routed to back to the pump.

High Pressure Circuit Protection

A relief valve (c) is located in the vibratory pump (3). The relief valve will open if pressures exceed specifications.

Charge Circuit

The vibratory circuit is a closed loop circuit that allows hydraulic oil to be circulated into it if a deficiency occurs.

- Hydraulic oil from the steering pump (5) flows into the steering valve, Orbitrol (8), through the filter (9) to the propulsion pump (3).
- The propulsion pump (3) charge relief valve (b) maintains pressure to operate the pump swash plate when the compactor is moving. The propulsion motor (6) relief valve (h) allows the oil to re-circulate.

Hydraulic Steering System
The diagram below illustrates the hydraulic steering system for the SV505:

1. Engine
2. Coupling
3. Propulsion pump assembly
4. Vibrator pump
5. Steering pump
6. Orbitrol
    a. Relief valve
    b. Check valve
7. Steering Cylinder
    a. Piston rods
    b. Charge relief valve
8. Charge circuit hydraulic filter
9. Suction hydraulic filter.

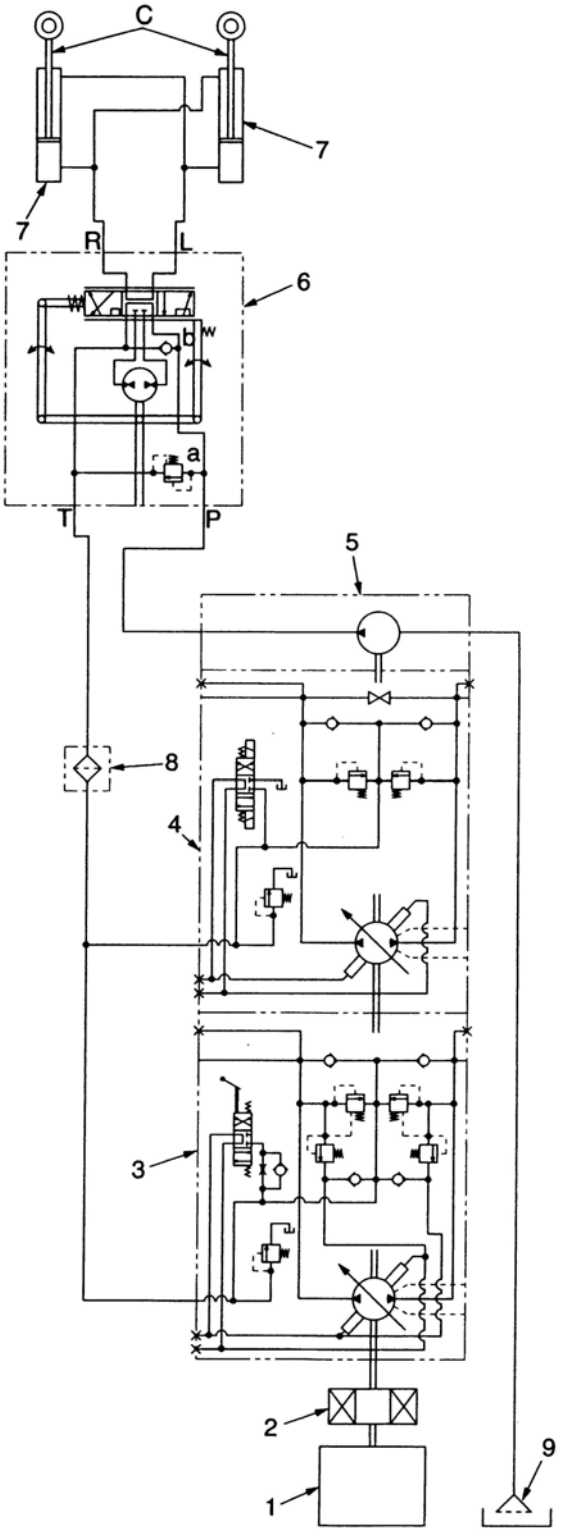

Hydraulic Steering Circuit

The hydraulic steering system is comprised of the following components:

- Steering/charge pump (5)
- Orbitrol (6)
- Steering cylinders (7)
- Hydraulic filter (8).

The steering mechanism is articulated and located so the compactor articulates between the front and rear frame.

Operation

Hydraulic oil from the pump (5) enters the Orbitrol (6).

- The Orbitrol supplies hydraulic oil to the steering cylinders (7). The amount of hydraulic oil supplied to the steering cylinders is determined by the steering wheel direction and speed of movement.
- The hydraulic oil supplied to the steering cylinders (7) moves the steering cylinder piston rods (c) to achieve the amount of compactor steering articulation.
- The hydraulic oil is routed from the opposite side of the steering cylinder it entered, through the Orbitrol (6), hydraulic filter (8), hydraulic propulsion pump (3) and into the hydraulic vibrator pump (4).

High Pressure Circuit Protection

The Orbitrol (6) relief valve (a) opens if the pressure exceeds specifications.

Charge Circuit

The steering circuit is a closed loop circuit that allows hydraulic oil to be circulated into it if a deficiency occurs.

- Hydraulic oil from the steering pump (5) flows into the steering valve, Orbitrol (10), through the filter (11) to the propulsion pump (3).
- The propulsion pump (3) charge relief valve (b) maintains pressure to operate the pump swash plate when the forward/reverse lever is in the neutral position. When compactor is moving the propulsion motor (6) relief valve (h) allows the oil to re-circulate.

Brake System

The diagram below illustrates the brake system for the SV505.

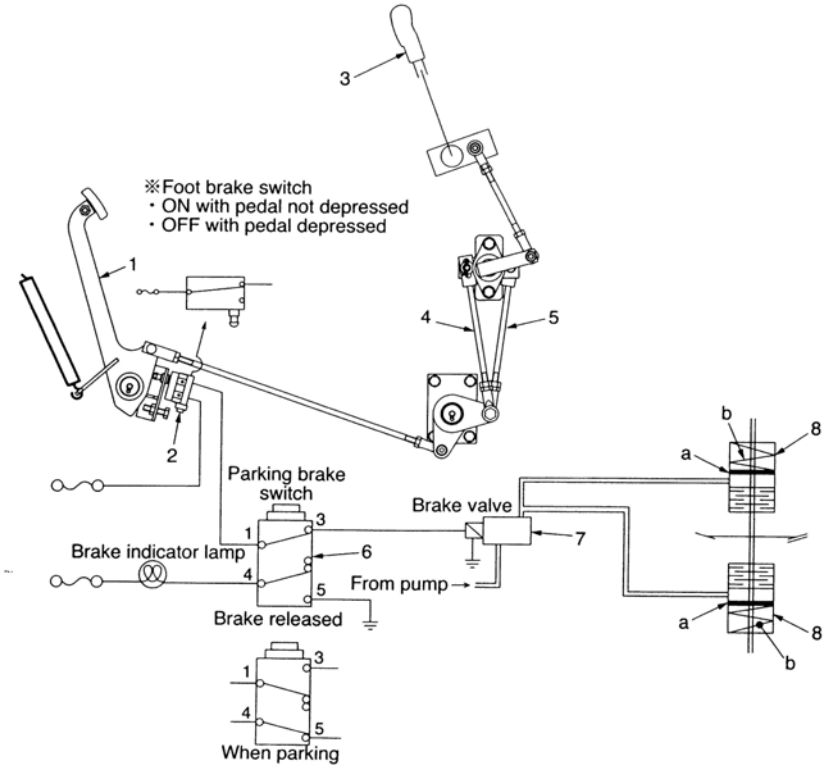

Brake System

1. Brake pedal
2. Brake pedal switch
3. Forward/Reverse lever
4. Return to neutral rod
5. Return to neutral rod
6. Parking brake switch
7. Brake valve
8. Brake assemblies.

The brake pedal switch is a normally closed switch. When the brake pedal is not engaged the switch is ON. When the brake pedal is disengaged the switch is OFF.
When the brake pedal (1) is depressed the parking brake switch (2) is switched OFF. This opens the parking brake circuit and applies the brakes. The brakes will be applied if the parking brake is engaged or disengaged.

Parking Brake
When the parking brake is applied:

- The contacts of the parking brake switch (6) are open. The circuit to the brake valve (7) is open. The contacts for the parking brake lamp are closed and the lamp illuminates.
- There is no hydraulic oil supplied to the brake valve (7) and to the brake assemblies (8). The springs (b) move the piston (a) toward the brake discs and plates so they contact one another. The brake is applied.

When the parking brake is released:

- The contacts to the parking brake switch (6) close and allow flow to the brake valve (7). The brake indicator lamp is not illuminated.
- The hydraulic oil supplied to the brake valve (7) routes to the pistons (a) of the brake assemblies (8) to compress the springs (b). The brake is released.

Operator station controls are defined by function below:

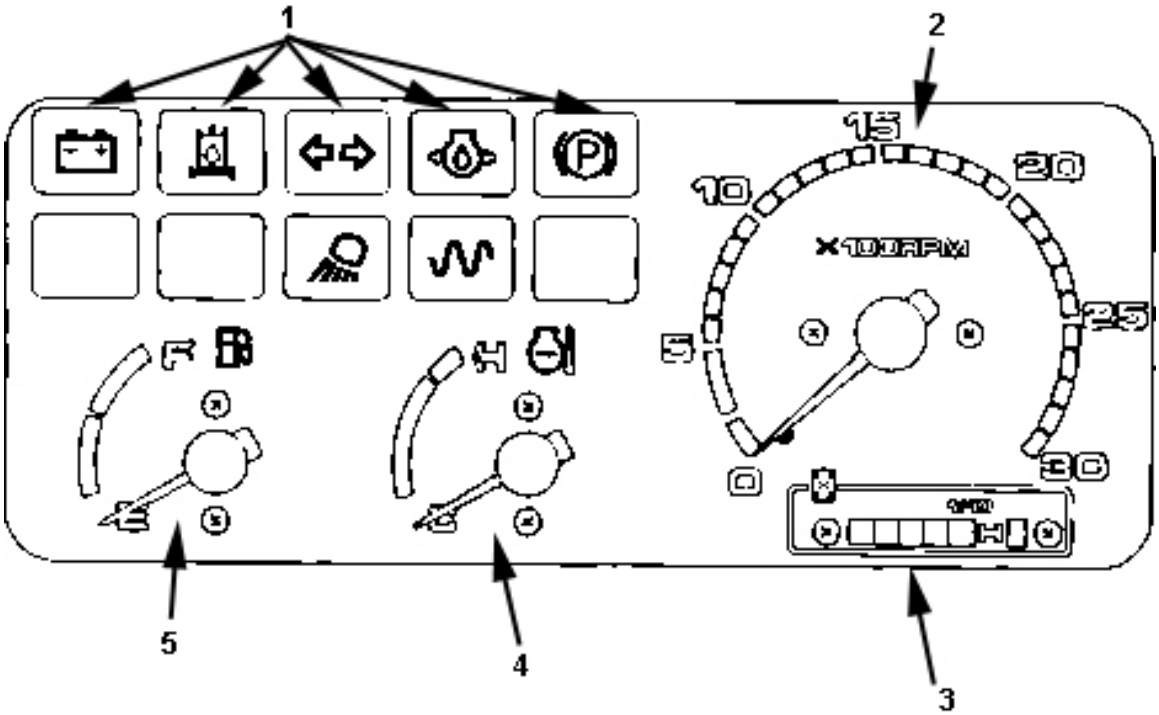

Combination Meter

1. Monitor display – Illuminates when an alarm condition exists.
2. Tachometer – Indicates engine speed.
3. Hour meter – Indicate amount of time compactor has operated.
4. Temperature gauge – Indicates temperature.
5. Fuel gage – Indicates amount of fuel in compactor fuel tank.

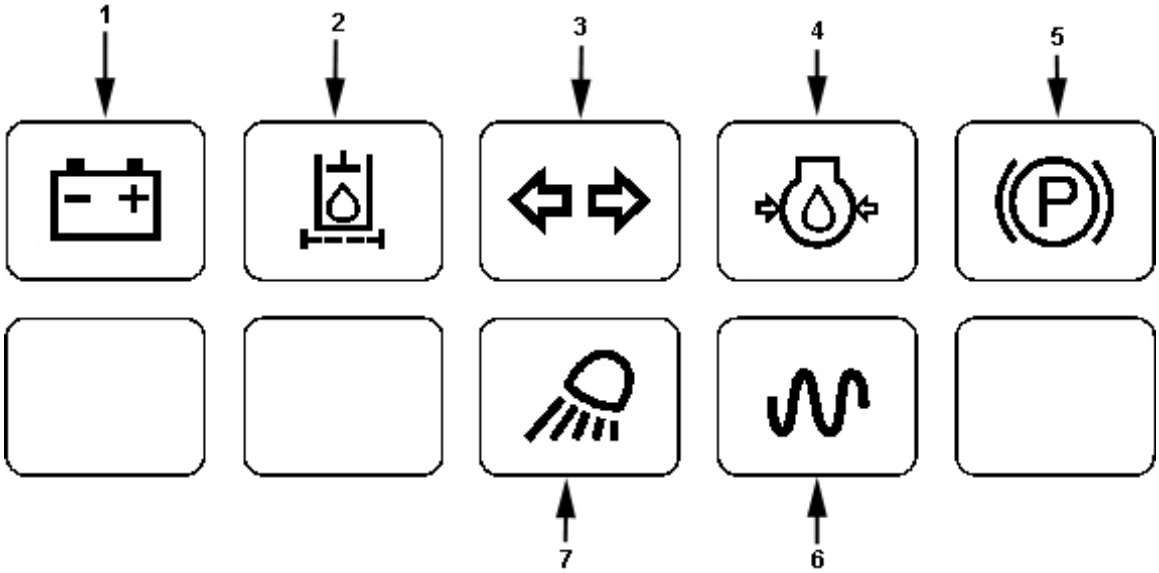

Monitor Display

1. Battery charge lamp – Illuminates when the battery is not charging to specifications.
2. Hydraulic filter warning lamp – Illuminates when the hydraulic filter is restricted.
3. Turn signal indicator lamp (optional) – Illuminates when a turn signal is engaged.
4. Engine oil pressure lamp – Illuminates when engine oil pressure is below specifications.
5. Parking brake lamp – Illuminates when the parking brake is engaged.
6. Vibration lamp – Illuminates when drum vibration is engaged.
7. Headlamp – Illuminates when headlamp is on.

CAUTION

The hydraulic filter lamp can illuminate when the engine is cold and the engine rpm is increased. Allow the engine to warm and the lamp to extinguish prior to operating the compactor.

CAUTION

All monitor display lamps will illuminate when the key switch is turned to the ON position as a lamp check. When the engine is started the lamps extinguish. If the lamps do not illuminate and extinguish during start up, stop the engine and troubleshoot the problem prior to operating the compactor.

Tachometer The tachometer is located in the combination meter. The tachometer indicates engine speed in rpm. An hour meter is located below the tachometer and indicates total compactor operating time. The service intervals are based on the hour meter.		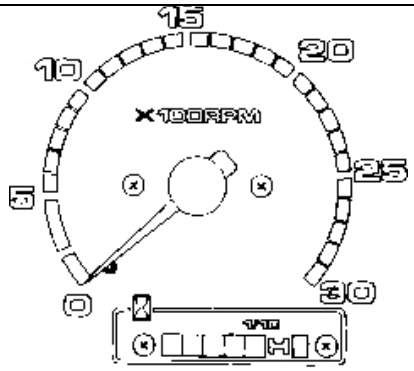
Temperature Gauge The temperature gauge measures coolant temperature of the engine. When the needle moves into the H region the engine must be idled and shut down if the temperature does not decrease out of the H region.		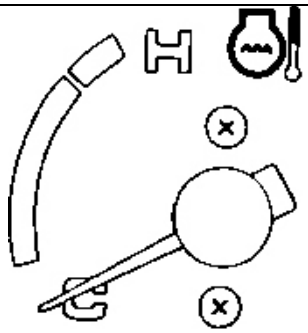
Fuel Gauge Indicates the fuel level in the fuel tank. E = Empty tank F = Full tank.		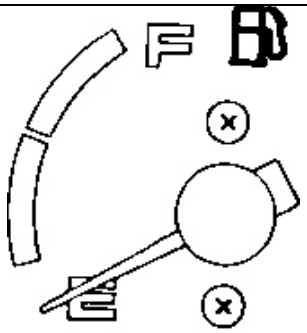

Engine Lamps

All three lamps illuminate when the engine is cranked and extinguish when the engine is started. If they do not illuminate and extinguish, shutdown the engine and troubleshoot the condition.

ENGINE STOP Lamp
When the engine stop lamp illuminates the engine must be shut down and troubleshoot the condition prior to operation.

WARNING Lamp
When the warning lamp illuminates the engine must be shut down and troubleshoot the condition.

WAIT TO START Lamp
When the wait to start lamp is illuminated the engine is in a self-diagnostic mode and should not be started.

Starter Switch

The starter switch starts and stops the engine.

OFF position – All electric systems and engine are switched off. Key can be removed.
ON position – Charging circuit and lamp circuit are energized. Engine is run in this position.
START position – Engine is cranking in this position. Allow switch to return to ON position once engine has started.

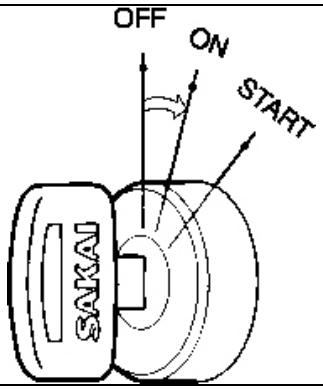

Parking Brake Switch

DANGER

Set the parking brake prior to dismounting the compactor. If the parking brake is not set, the compactor can move and cause personal injury or equipment damage. The parking brake can be used in an emergency.

CAUTION

To reduce possibility of button damage, never pull on the button to disengage. Pulling on the button can cause equipment damage.

When the button is in the down position the parking brake is on and the button lamp is illuminated.

Press the button to release the parking brake.

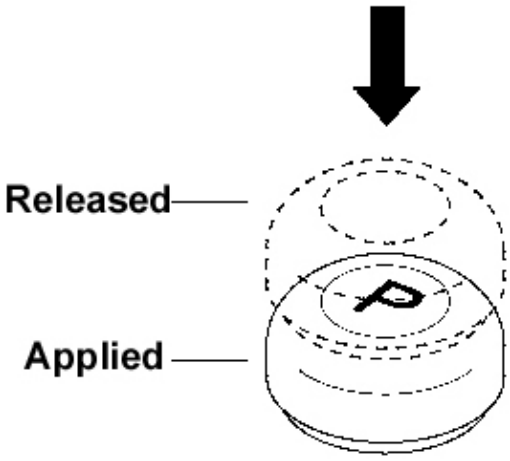

Horn Button The horn button is located in the center of the steering wheel. Press the button to activate the horn.		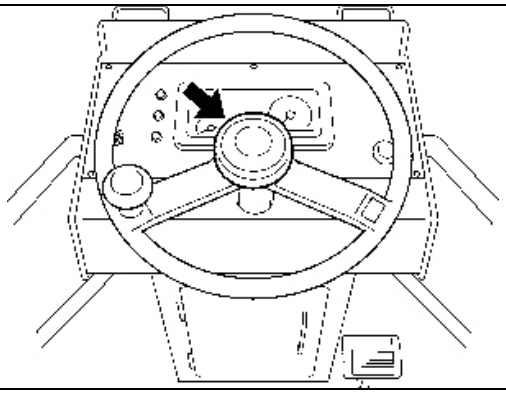
Vibrator Amplitude Switch **CAUTION** **To reduce the possibility of equipment damage, do not operate the vibration option unless the engine rpm is set to full.** The vibrator amplitude switch is located on the panel to the left of the operator seat. The settings from left to right are minimum vibration, OFF and maximum vibration. Turning the switch clockwise to maximum position causes the vibration to start at maximum amplitude. Turning the switch counter clockwise to the minimum position causes the vibration to start ant the minimum amplitude.		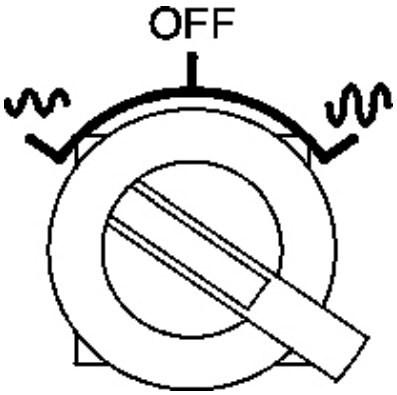
Vibration Selector Switch **CAUTION** **To reduce the possibility of equipment damage:** **Do not operate the vibrator on a hared surface such as cement, concrete or steel plates.** • **Turn the vibrator amplitude switch to OFF position when the compactor is not moving.** • **Turn the vibrator amplitude switch to OFF position when the compactor is stuck in mud.** This switch allows the vibration control to be moved to the forward/reverse lever button or to the CONT. position for continuous use.		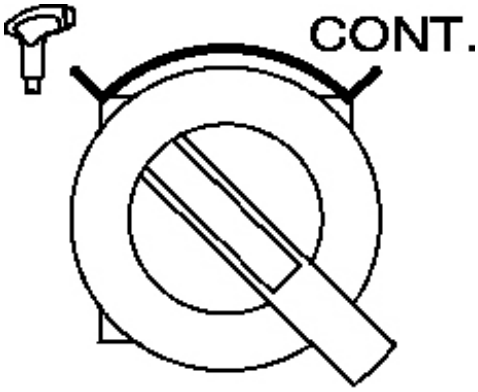

Forward/Reverse Lever Vibration ON/OFF Switch The ON/OFF switch on the forward/reverse lever can be used to activate vibration when the following conditions are met: • Vibration amplitude switch in minimum or maximum vibration position. • Vibration selector switch in the lever position. Push the button on the lever to activate the vibration. Push the button on the lever a second time to deactivate vibration.		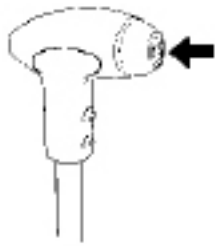
Engine Speed Change Switch Allows the engine speed to be adjusted between the following rpm settings: • IDLE = 900 ± 1 rpm • MID = 1800 ± 1 rpm • FULL = 2300 ± 1 rpm.		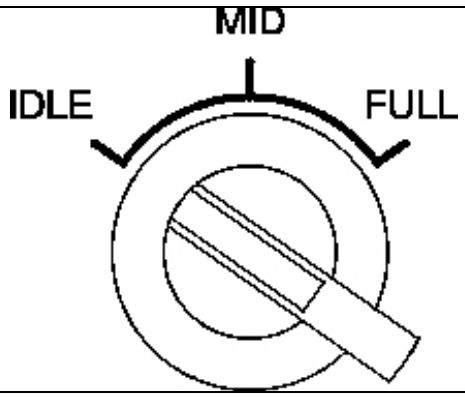
Compactor Speed Change Switch The compactor speed change switch allows the operator to change the speed the compactor travels. • Turtle = 0 to 6 km per hour [0 to 3.7 mph] • Rabbit = 0 to 10 km per hour [0 to 6.2 mph].		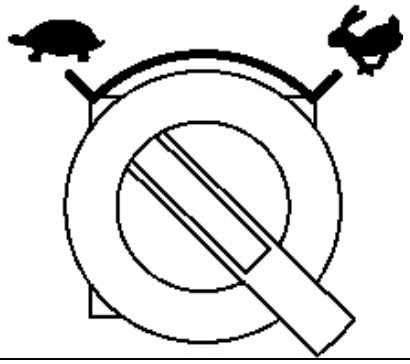

Engine Diagnostic Switches Two switches that communicate with the engine ECM are located in the dash riser of the compactor. The switches are the diagnostic ON/OFF switch and the increment/decrement switch. Do not use these switches unless directed by a Cummins® representative.		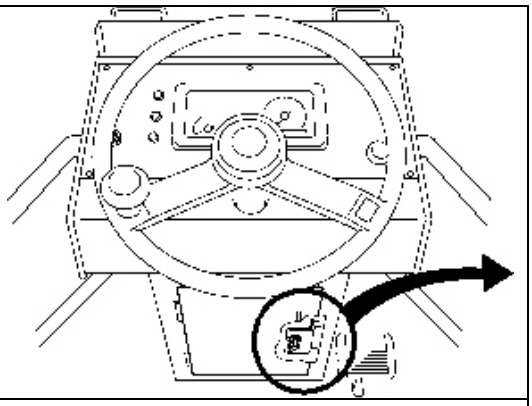
Forward/Reverse Lever **CAUTION** **To reduce the possibility of equipment damage:** • **For normal braking, return the lever to the neutral position to stop the compactor.** • **For emergency braking use the brake pedal or press the parking brake.** Moving the forward/reverse lever to the forward or reverse position directs the machine to move in associated direction. The machine speed increases or decreases in proportion to the position of the lever.		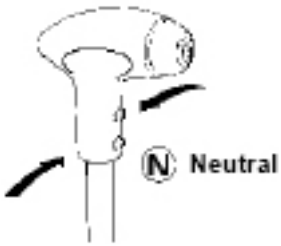
Unloader Valve **DANGER** **To reduce the possibility of personal injury and equipment damage:** • **When the compactor is on a slope make sure to chock the wheels prior to unloading the hydraulic drive.** • **Make sure the parking brake is applied prior to unloading the hydraulic drive.** The Unloader valve disengages the hydraulic drive by relieving the pressure on the drive system. For towing or loading, turn the valve counter clockwise. For normal operation, turn the valve clockwise.		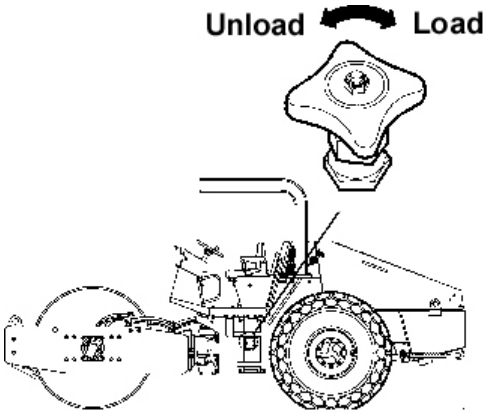

Fuse Box **WARNING** **To reduce the possibility of equipment damage secure power to the fuse box by turning the key switch to the OFF position**. Fuses protect the electrical and electrical components from damage because of a short circuit. Change any fuse that is corroded or does not sit in the fuse holder securely. Make sure the correct amperage of fuse is used when replacing faulty fuses.		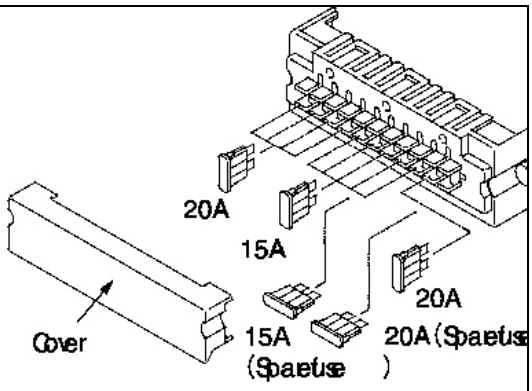

Operating the Compactor

This procedure outlines the correct operating procedure for the compactor. For safe operation of the compactor all operating instructions must be followed.

Release Brakes for Towing

WARNING

To reduce the possibility of personal injury and equipment damage do not attempt to release the brake immediately after the engine is stopped. Allow the hydraulic oil to cool down prior to releasing the brake.

WARNING

To reduce the possibility of personal injury, wear safety goggles, hardhat and safety gloves when releasing the brake.

Prior to towing the brakes must be released. The brake release bolts are on top of the Dana rear end.

To release the brakes:

- Loosen the locking nut (B) on both bolts (A) on for one-side brakes.
- Tighten both bolts alternately until the resistance has built up.
- Repeat the process for the remaining side.

To engage the brakes:

- Tighten the bolts (A) alternately until the distance between the bolt head and the reducer face (C) is 34 mm [1.34 in].
- Tighten the lock nut.
- Repeat the process for the remaining side.

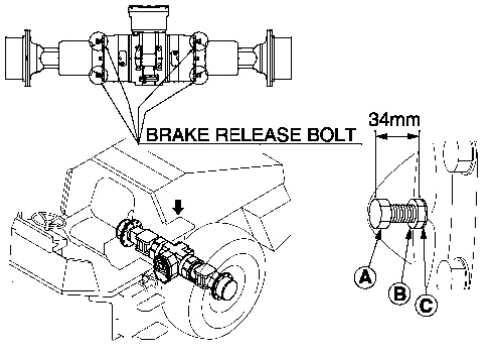

Before Starting Inspection **WARNING** **To reduce the possibility of personal injury and equipment damage, only allow one operator on the compactor at one time.** **WARNING** **To reduce the possibility of personal injury and equipment damage, operate the compactor from the operator seat only.** **WARNING** **To reduce the possibility of personal injury and equipment damage, make sure the steering bar is in the carrying position. If the steering bar is in the steering lock position, the compactor cannot be turned**. Check the position of the steering lock bar. The steering lock bar is located at the left center of the compactor. To unlock the bar: • Remove the spring pin • Pull the lock pin out • Set the bar into the carrying position • Install lock pin and spring pin. To lock the steering: • Remove the spring pin • Pull the lock pin out • Set the bar into the lock steering position • Install the lock pin and spring pin.		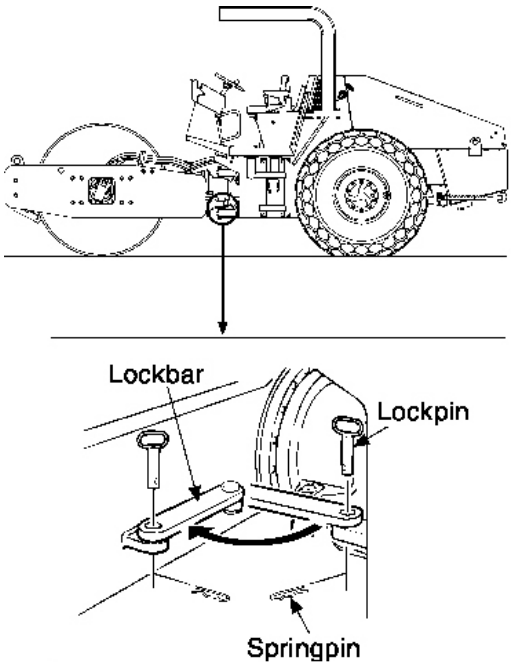
Make sure the forward/ reverse lever is in the neutral position. The engine will not start if the forward/reverse lever is not in the neutral position.		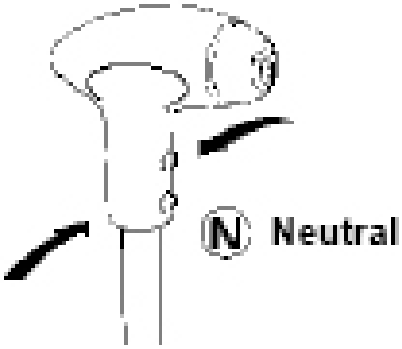

Starting the Engine **WARNING** **To reduce the possibility of personal injury, inspect the area around the compactor for personal that are not necessary. Sound the horn prior to starting.** Set the engine speed change switch to the IDLE position.		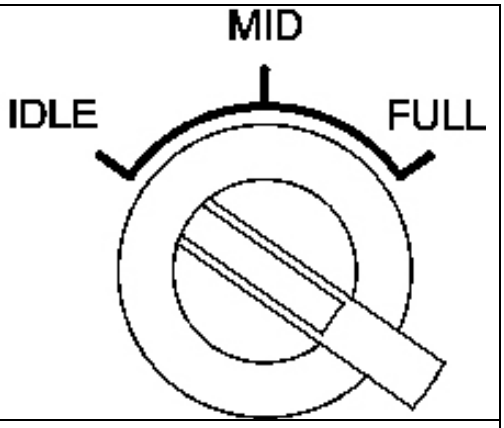
Turn the starter switch to the ON position and make sure the following lamps are illuminated on the monitor: • Battery charge warning lamp • Hydraulic oil filter warning lamp • Engine coolant warning lamp • Parking brake lamp.		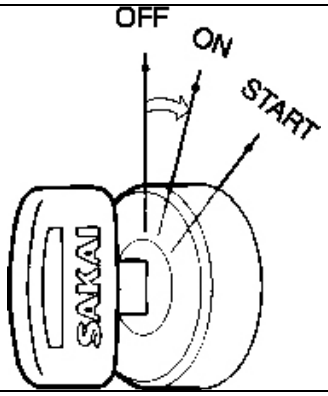
Make sure the follow illuminate and extinguish: • ENGINE STOP • WARNING • WAIT TO START.		

⚠ **CAUTION** **To reduce the possibility of equipment damage when starting the engine:** • **Do not allow the key switch to remain in the start position longer than 15 seconds.** • **If the engine does not start in 15 seconds, allow 30 seconds for the starter to cool down.** • **Make sure the monitor lamps illuminate when the engine is cranking and extinguish immediately after the engine has started.** • **If any warning lamps illuminate while the compactor is operating, stop operation and troubleshoot the fault.** Turn the keyswitch to the START position until the engine starts. Release the key and the key switch will travel to the ON position.		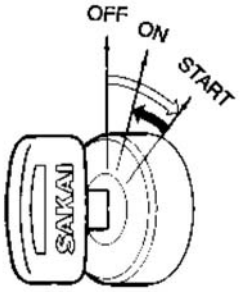
⚠ **CAUTION** **To reduce the possibility of equipment damage, do not try to move the compactor immediately after starting or increase the engine speed abruptly. These actions can cause hydraulic pump and motor cavitation**. Allow the engine to idle and warm up for approximately 5 minutes. The engine and hydraulic components must be allowed to warm up to reduce the possibility of premature wear. After the compactor has warmed up, make sure: • Temperature gauge pointer is near the center zone • Fuel gauge pointer is between the E and F marks • Battery charge lamp is extinguished • Engine oil pressure lamp is extinguished • Engine check lamp is extinguished • Make sure there are no unusual noises and the exhaust gas is normal.		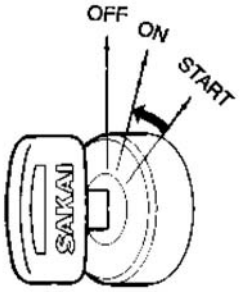

Traveling **WARNING** **To reduce the possibility of personal injury, inspect the area around the compactor for personnel that are not necessary. Sound the horn prior to starting.** **WARNING** **To reduce the possibility of personal injury and equipment damage, the compactor must be adjusted to the turtle speed when operated on a steep slope.** **CAUTION** **To reduce the possibility of equipment damage, do not turn the key switch to the OFF position while the compactor is in operation.** Select the desired speed by turning the compactor speed control switch. • Turtle = 0 to 6 km per hour [0 to 3.7 mph] • Rabbit = 0 to 10 km per hour [0 to 6.2 mph].		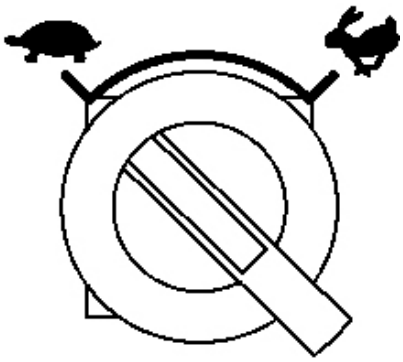
Adjust the engine speed by turning the engine speed change switch to the desired position. • IDLE = 900 ± 1 rpm • MID = 1800 ± 1 rpm • FULL = 2300 ± 1 rpm.		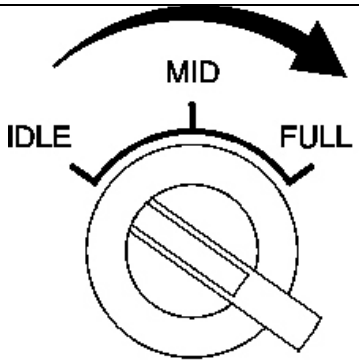
The parking brake button lamp will be illuminated, indicating the parking bake is set. Press the parking brake button to release the parking brake.		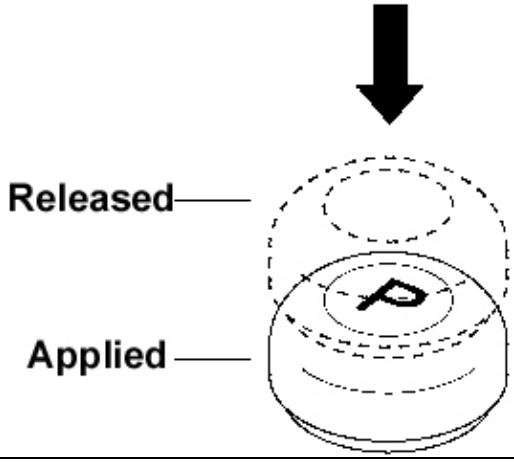

⚠ WARNING

The compactor tends to have blind spots in the rear. To reduce the possibility of personal injury and/or equipment damage, make sure nothing is behind the compactor prior to placing the forward/reverse lever in the reverse position.

⚠ CAUTION

Avoid abrupt operation of the forward/reverse lever. The hydraulic drive system responds to the speed the lever travels and the location of the lever.

Slowly move the forward/reverse lever in the desired direction of travel.

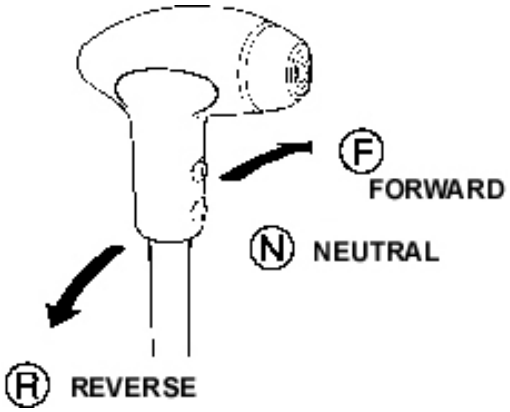

Stopping and Parking

⚠ WARNING

To reduce the possibility of personal injury and equipment damage:

- **Avoid abrupt breaking.**
- **Avoid parking on an incline.**
- **If the compactor must be parked on an incline, set the parking brake and place chocks under the wheels.**

⚠ CAUTION

To reduce the possibility of equipment damage:

- **For normal braking, return the lever to the neutral position to stop the compactor.**
- **For emergency braking, use the brake pedal or press the parking brake.**

Place the forward/reverse lever in the neutral position. The compactor will stop once the lever is in the neutral position.

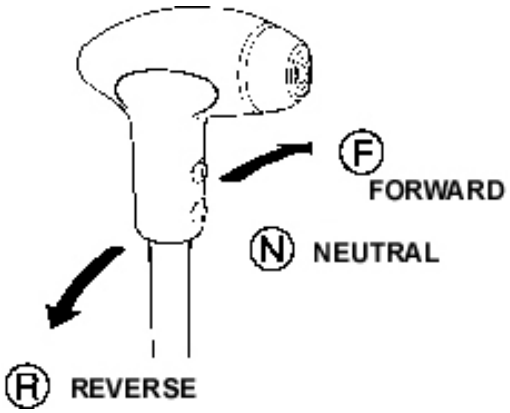

Press the parking brake button and make sure the lamp illuminates.

The illuminated lamp indicates the parking brake has been set.

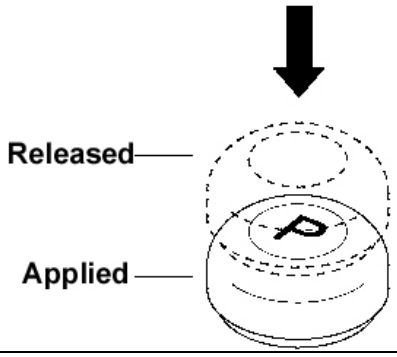

Stopping the Engine **CAUTION** **To reduce the possibility of equipment damage:** • **Do not suddenly shut down a hot engine, except in emergency conditions.** • **Do not shut down an overheating engine, move the engine speed selector switch to the idle position and allow the engine to cool down.** Place the engine speed select switch in the idle position.		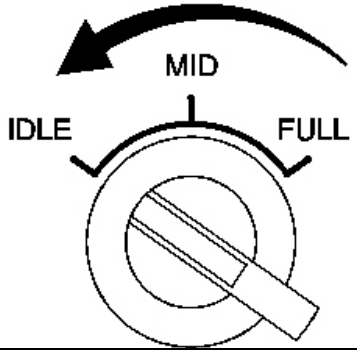
DANGER **Set the parking brake prior to dismounting the compactor. If the parking brake is not set, the compactor can move and cause personal injury or equipment damage. The parking brake can be used in an emergency.** **DANGER** **If the compactor must be parked on an incline, set the parking brake and place chocks under the wheels. The compactor can move if not chocked on an incline and cause personal injury and equipment damage. Never fail to remove the key from the key switch.** **DANGER** **To reduce the possibility of personal injury and compactor damage, do not turn the key switch to the off position when the compactor is in motion.** Turn the keyswitch to the OFF position to shutdown the engine. Check for leaks and drum abnormalities. Fill the fuel tank and remove all debris from compactor. Clean excess mud and debris from the drum. .		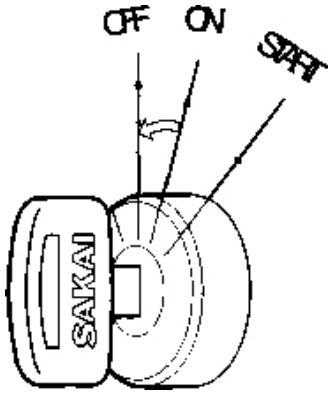
Vibratory Operation Set the engine speed switch to the FULL position		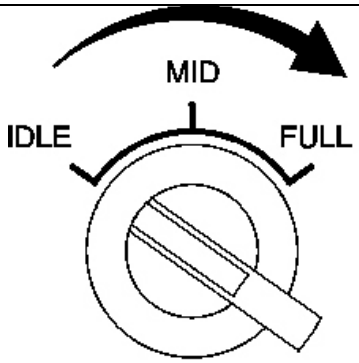

Set the vibration amplitude switch to the desired position. Clockwise to OFF position is minimum vibration. Counter clockwise to OFF position is maximum vibration.		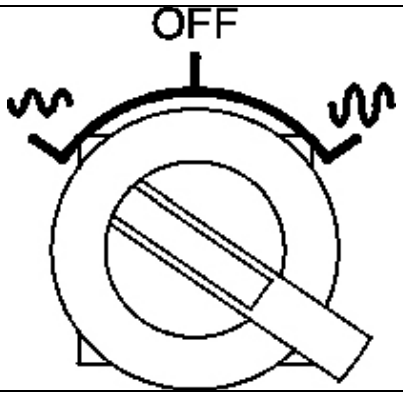
⚠ CAUTION **To reduce the possibility of equipment damage:** • **Do not operate the vibrator on a hard surface such as cement, concrete or steel plates.** • **Turn the vibrator amplitude switch to OFF position when the compactor is not moving.** • **Turn the vibrator amplitude switch to OFF position when the compactor is stuck in mud.** This switch allows the vibration control to be moved to the forward/reverse lever button or to the CONT. position for continuous use.		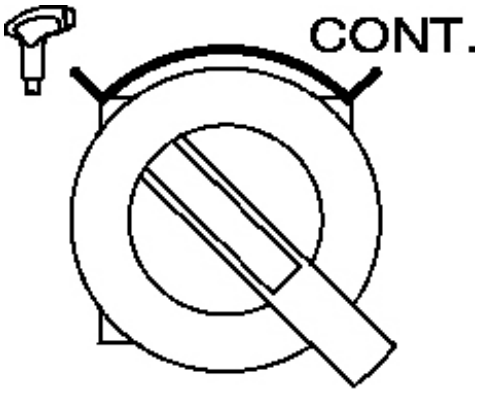
The ON/OFF switch on the forward/reverse lever can be used to activate vibration when the following conditions are met: • Vibration amplitude switch in minimum or maximum vibration position. • Vibration selector switch in the lever position. Push the button on the lever to activate the vibration. Push the button on the lever a second time to deactivate vibration.		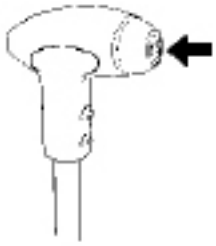

Loading Using a Winch Equipped Trailer **WARNING** **To reduce the possibility of personal injury and equipment damage**: • **Use ramps of the proper width, length and thickness to allow for safe compactor load.** • **If the ramps deflect under load, place wooden blocks under the ramp to reinforce it.** • **Only load on level hard ground. Leave a sufficient distance between the compactor and shoulder.** Engage the trailer brake and chock the wheels. The angle between the ramps and the ground must not exceed 15 degrees. Make sure the ramps are separated enough to accommodate the compactor roller width. Set the ramps. Align the compactor with the ramps.		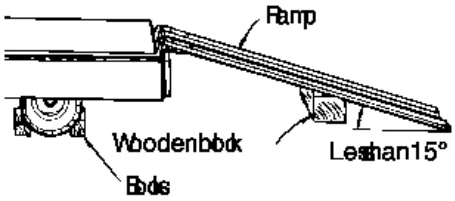
DANGER **To reduce the possibility of personal injury and equipment damage:** • **When the compactor is on a slope make sure to chock the wheels prior to unloading the hydraulic drive.** • **Make sure the parking brake is applied prior to unloading the hydraulic drive.** The Unloader valve disengages the hydraulic drive by relieving the pressure on the drive system. For towing or loading with a winch, turn the valve counter clockwise. For normal operation, turn the valve clockwise.		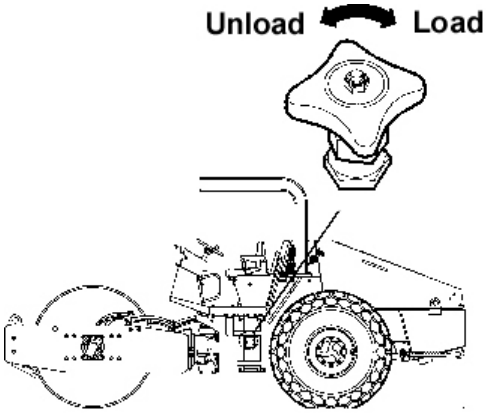

WARNING **To reduce the possibility of personal injury and equipment damage:** • **To reduce the possibility of the compactor slipping on the ramps, keep drum and ramps free from any debris and oil.** • **Do not attempt to steer the compactor while on ramp. If the compactor is not aligned correctly, back off of the ramps realign and load compactor.** Feed the cable from the winch to the compactor. Connect the cable to the compactor connection points (1) or (2). Start the engine and release the parking brake. Start the trailer winch and steer the compactor onto the ramps. Once the compactor is loaded onto the trailer close the Unloader valve. Set the parking brake. Make sure the parking brake lamp is illuminated. Secure the compactor to the trailer.		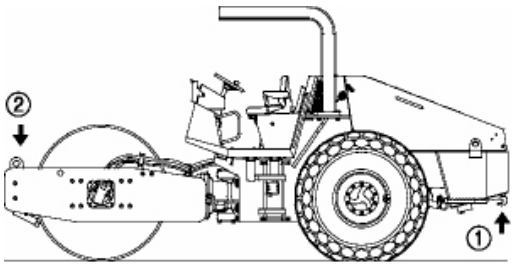

Self Propelled Loading **WARNING** **To reduce the possibility of personal injury and equipment damage:** • **Use ramps of the proper width, length and thickness to allow for safe compactor load.** • **If the ramps deflect under load, place wooden blocks under the ramp to reinforce it.** • **Only load on level hard ground. Leave a sufficient distance between the compactor and shoulder.** Engage the trailer brake and chock the wheels. The angle between the ramps and the ground must not exceed 15 degrees. Make sure the ramps are separated enough to accommodate the compactor roller width. Set the ramps. Align the compactor with the ramps.		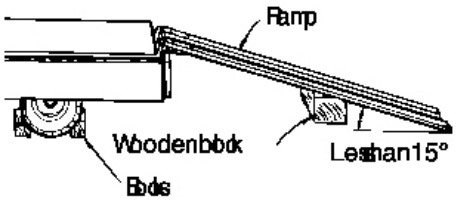
WARNING **To reduce the possibility of personal injury and equipment damage:** • **To reduce the possibility of the compactor slipping on the ramps, keep drum and ramps free from any debris and oil.** • **Do not attempt to steer the compactor while on ramp. If the compactor is not aligned correctly, back off of the ramps realign and load compactor.** Place the compactor speed selector switch in the turtle position. Load the compactor onto the trailer. Set the parking brake and make sure the lamp is illuminated. Secure the compactor onto the trailer.		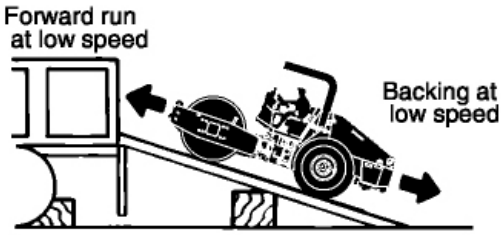

Working With the Compactor

WARNING

To reduce the possibility of personal injury and equipment damage:

- **When traveling up an incline the compactor must be operated at low speed.**
- **Do not attempt to shift to high speed when traveling up an incline. The compactor can slip during the speed change.**
- **When traveling down an incline adjust the compactor speed so the engine does not exceed 2500 rpm.**
- **Do not operate the compactor sideways on a hill. The compactor must be operated traveling up and down the hill.**

CAUTION

Do not operate the compactor vibrator on a hard surface such as concrete. Operating the compactor vibrator on a hard surface can cause the machine to jump and have abnormal shock load. Damage to shock isolators will result.

When changing the direction of travel on the compactor during asphalt mix compaction, slowly shift the forward/reverse lever.

The SV505 compactor can be used for the following work:

- Road improvement
- Embankment construction
- Dam construction.

The SV505 compactor can compact the following materials:

- Crusher run
- Concrete
- Sands
- Soils
- Slag
- Soft Rock.

The SV505 compactor can compact the following layers:

- Base course
- Sub-grade
- Embankment.

After operating the compactor, perform the following checks:

- Check coolant temperature, engine oil pressure and fuel level.
- Remove mud and water from the compactor. Mud and water can get into the seals through the steering cylinder piston rods. Equipment damage will result.
- Park the compactor on a hard, dry surface. If a hard, dry, surface is not available, park the compactor on metal plates.
- Low temperature will cause significant reduction of battery efficiency. Cover batteries or remove them from the machine and store in a warm dry location.

Maintenance

The frequency of inspection, service and lubrication performed on the SV505 compactor has significant influence on the performance and life of the compactor. This procedure outlines typical intervals for inspection and service. Inspection and service must be performed in accordance within the intervals.

CAUTION

To reduce the possibility of premature compactor wear:

- **Always use Sakai genuine parts for replacement.**
- **Use lubricants recommended by Sakai. Never mix different brands of lubricants.**
- **When checking hydraulic oil level, engine oil level, or changing hydraulic, fuel and engine oil and filters, make sure dirt does not enter the system.**
- **Park the compactor on hard, level ground when changing lubricants or checking the level.**
- **Change the hydraulic or engine oil when the temperature is high enough to allow the oil to drain freely.**
- **When the compactor is set up for long-term storage, fill the fuel tank and lubricate all necessary points. Start the engine once a month and allow the engine to run for 20 minutes.**
- **Never run water in the engine coolant system. Use the proper anti-freeze to water mixture.**
- **Hydraulic pumps and motors must be serviced at authorized service shops.**
- **Turn the keyswitch to the OFF position when servicing batteries or working on the electric system of the compactor.**
- **The engine oil and filter must be changed after the first 50 hours of engine operation.**
- **When a warning lamp illuminates, the symptom must be repaired immediately.**
- **Inspect the compactor electrical for the listed below issues at a monthly interval:**
    - **Damage to wiring harness, loose p-clips and cable ties.**
    - **Make sure connectors must fit together securely.**
    - **Make sure all electrical systems function properly.**

Certain components require replacement at designated intervals. Make sure the components are replaced when advised. This practice will reduce the possibility of compactor down time because of failed components.
During inspection of the compactor if leaks or damaged components are detected, replace the failed component immediately.

Compactor Maintenance Schedule

System	Component
Every 10 Hours or Daily	Check engine oil level. Add as necessary.
	Check coolant level. Add as necessary.
	Check fan belt tension and adjust as necessary.
Every 50 Hours	Check hydraulic oil level. Add as necessary.
	Check battery electrolyte level. Add as necessary.
	Check fuel filter sediment and water. Drain as necessary.
	Check air cleaner restriction indicator.
Every 250 Hours	Check tire air pressure and condition.
	Check condition of roller rubber dampers.
	Check vibrator oil level.
	Apply grease to brake linkages.
	Change engine oil filter element.
	Apply grease to center pin and tilt pin bearings.
	Apply grease to steering cylinders.
	Check transmission oil level. Add as necessary.
	Change engine oil.
	Check tire lug nuts for tightness 631 N•m (465 ft-lb).
Every 500 Hours	Replace hydraulic return filter.
	Replace hydraulic line filter.
	Check for loose control linkage and adjust.
	Change fuel filter element.
Every 1,000 Hours	Clean hydraulic tank suction screen.
	Change hydraulic oil.
	Change vibrator oil.
	Change drive motor gear case oil.
	Change transmission oil.
	Change final drive/differential oil.
As Required	Change or clean air cleaner element.
	Clean inside of fuel tank.

Compactor Component Replacement Schedule

System	Component	Period
Brake System	Brake hose	2 years
Steering System	Orbitrol seals	2 years
	Hydraulic hoses	2 years
	Steering cylinder seals	2 years
	Hydraulic pump seals	4 years
Drive System	Axle seals (adapted compactor only)	4 years
	Hydraulic drive pump seals	4 years
	Hydraulic drive motor seals	4 years
	Hydraulic hoses	4 years
	Roller rubber isolators	4 years
Fuel System	Fuel hoses	4 years
Engine System	Engine mounting rubber isolators. Refer to the Operation and Maintenance Manual QSB4.5 and QSB6.7, Bulletin 4021531 maintenance schedule	4 years
Cooling System	Radiator hose and coolant	2 years
Electric/Electronic	Wiring harness (adapted compactor only)	4 years

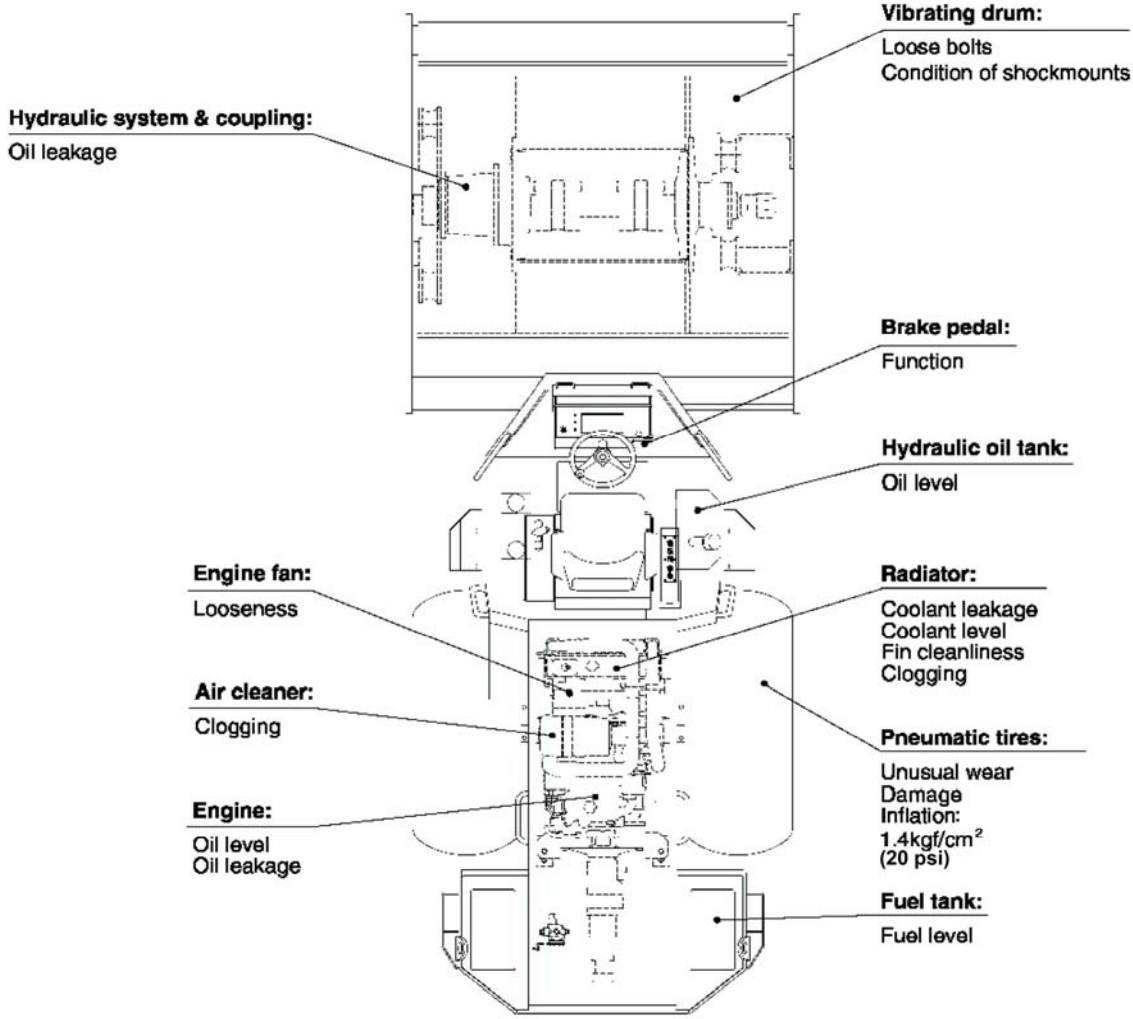

Prior to Starting the Compactor

Checking the compactor daily prior to operation is a must. Before starting the engine and operating the compactor, walk around the compactor and check for:

- Loose and missing bolts and nuts
- Hydraulic oil leaks
- Engine fan loose
- Air cleaner restriction indicator
- Engine oil leaks
- Hydraulic tank oil level
- Engine oil level
- Cooling system
- Tires
- Fuel tank level.

Lifting Compactor with Hoist **DANGER** **To reduce the possibility of personal injury and equipment damage:** • **Only qualified personnel can raise and lower the compactor with a hoist.** • **Use the appropriate lifting cables.** • **Lock the articulation of the compactor by placing the locking bar in the lock position.** • **Make sure the awning is clear from the lifting cables.** Secure the cables on the hook and lifting points illustrated. If the lifting cables contact other parts of the machine, isolate with cloth or wooden blocks. When lifting, keep the machine properly balanced. .		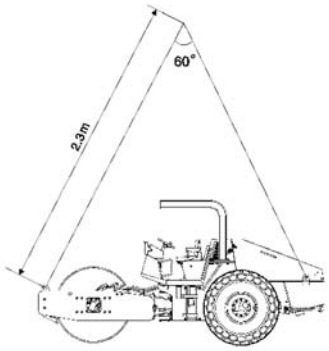
Maintenance Procedures Every 10 Hours or Daily Make sure the engine is shut down. Check the engine oil level. If the oil level is not in between the MIN and MAX marks, add oil. Refer to the Operation and Maintenance Manual, QSB4.5 and QSB6.7 Engine, Bulletin 4021531 for engine information.		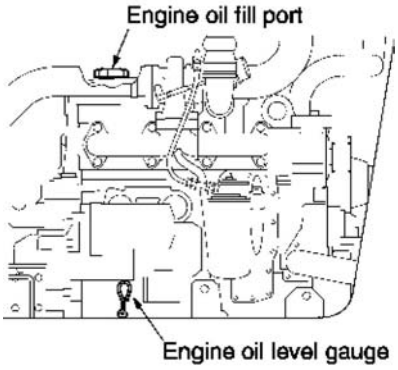
DANGER **Do not remove the pressure cap from a hot engine. Wait until the coolant temperature is below 50°C [120°F] before removing the pressure cap. Heated coolant spray or steam can cause personal injury.** Check the radiator subtank level. If the coolant level is not up to the mark, remove the radiator cap and fill the radiator and subtank with coolant. Change coolant every 2 years.		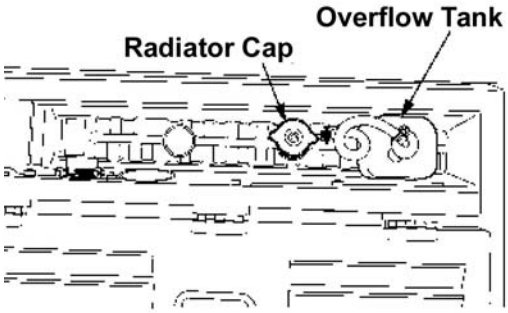

Check the fan belt for wear and damage. Replace the fan belt if damaged. Refer to the Operation and Maintenance Manual, QSB4.5 and QSB6.7 Engine, Bulletin 4021531 for engine information		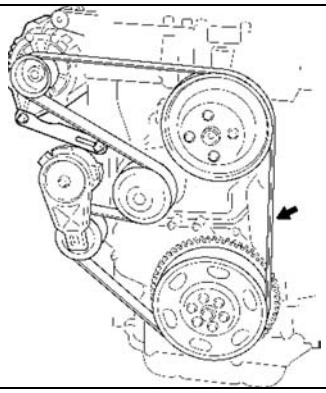
Maintenance Procedures Every 50 Hours The hydraulic tank oil level sight gauge is located on the side of the hydraulic tank. Check the hydraulic tank oil level sight gauge. If the oil level is not between the H and L mark add hydraulic oil.		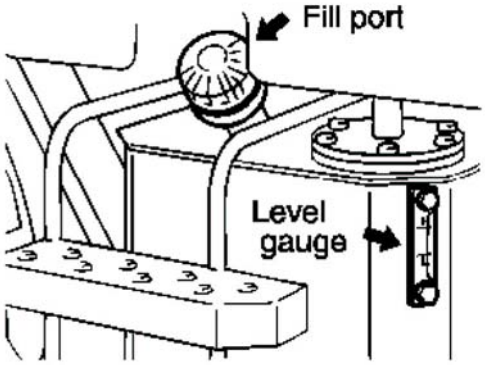
WARNING **Acid is extremely dangerous and can damage the machinery and can also cause serious burns. Always provide a tank of strong soda water as a neutralizing agent when servicing the batteries. Wear goggles and protective clothing to reduce the possibility of serious personal injury.** **WARNING** **Using or charging a battery with low electrolyte level can result in explosion. Continued use of a battery with low electrolyte level accelerates deterioration of battery plates.** Remove the battery cell caps. Check the level of the electrolyte. If the electrolyte level is low, add distilled water or electrolyte. Install battery caps. Make sure battery cables are tight and have corrosion inhibiting compound applied.		

Check the fuel filter sedimeter for accumulation of water.		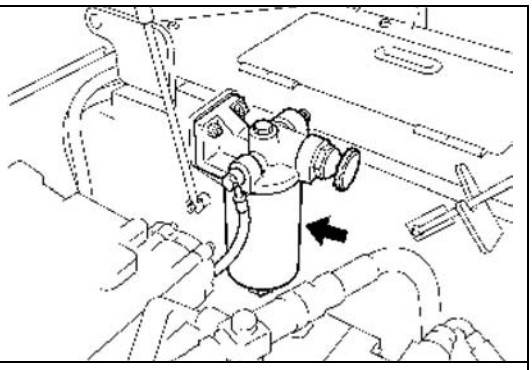
If there is water in the fuel filter sedimeter, drain the water out using the drain plug.		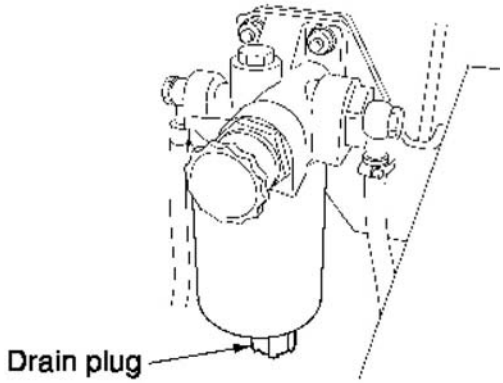
Check the air cleaner restriction indicator. If the red float reaches the SERVICE mark, replace the air cleaner.		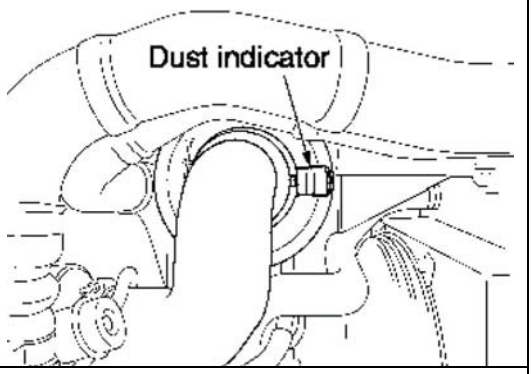
Maintenance Procedures Every 250 Hours Check the rubber vibration isolators on the roller for cracks. If the cracks travel completely through the isolator, it must be replaced. Make sure the rubber vibration isolator mounting bolts are tight. Tighten any loose bolts. Check tires for wear and damage. Replace worn or damaged tires. Tire inflation is 138 kPa [20 psi]. Make sure tire lug nuts are tight. Tighten loose lug nuts.		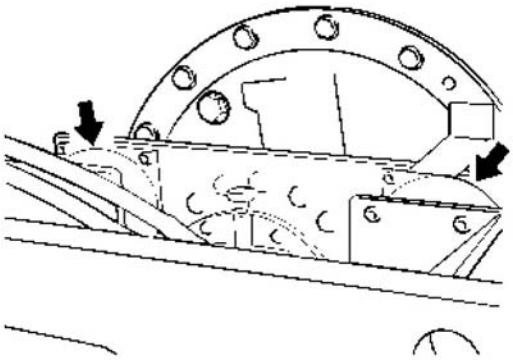

Check the vibratory motor oil level. If the vibratory motor oil level is below the level plug, remove the fill plug and add oil.		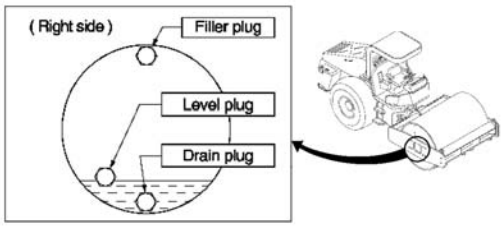
Apply grease to the brake linkages.		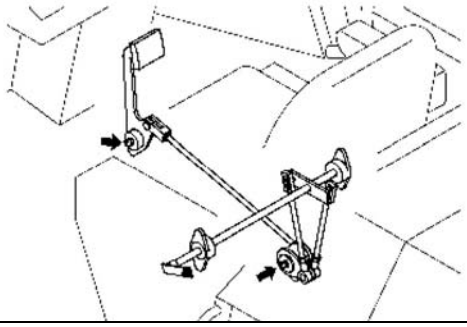
WARNING **To reduce the possibility of personal injury, avoid direct contact of hot oil with your skin.** **WARNING** **Some state and federal agencies have determined that used engine oil can be carcinogenic and cause reproductive toxicity. Avoid inhalation of vapors, ingestion, and prolonged contact with used engine oil. If not reused, dispose of in accordance with local environmental regulations.** The lubricating oil system service components are: • (1) Oil fill port • (2) Oil filter • (3) Drain plug. Refer to the Operation and Maintenance Manual, QSB4.5 and QSB6.7 Engine, Bulletin 4021531 for oil change procedure.		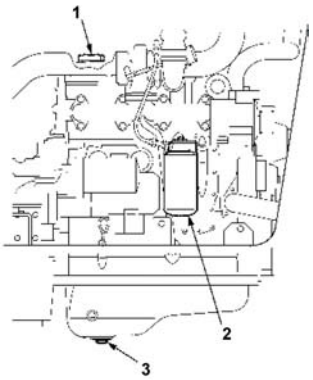

Apply grease at the 4 locations on the center pin.		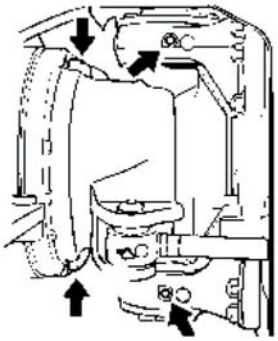
There are 2 steering cylinders. One cylinder is located on each side of the compactor. Each cylinder has 2 grease locations. Apply grease to the steering cylinders.		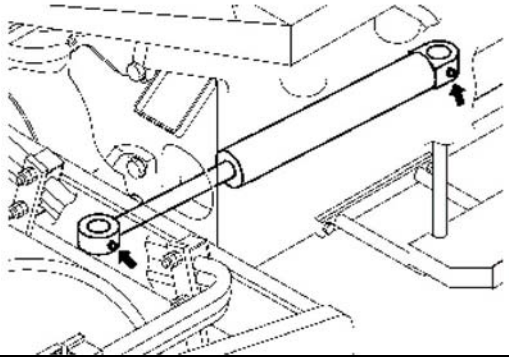
Check the transmission oil level. Add oil as necessary through the fill port.		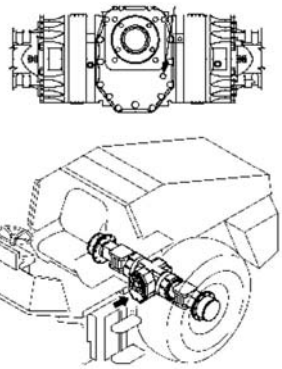
⚠ CAUTION **To reduce the possibility of equipment damage:** **When inspecting turn the tire in the clockwise direction.** **Excessive tightening of the lug nuts can cause the studs to crack.** Check for loose lug nuts. Tighten loose lug nuts. Torque: 631 N●m [465 ft-lb] Tighten the lug nuts after the first 50 hours of operation.		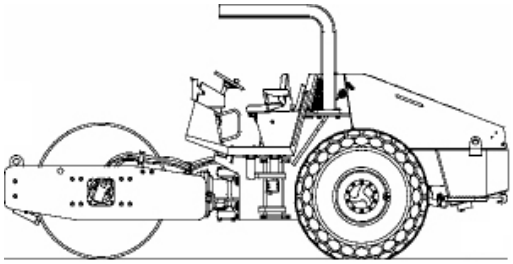

Maintenance Procedures Every 500 Hours Change the hydraulic return and line filter. Change the fuel filter. Refer to the Operation and Maintenance Manual, QSB4.5 and QSB6.7 Engine, Bulletin 4021531 for fuel filter procedure.		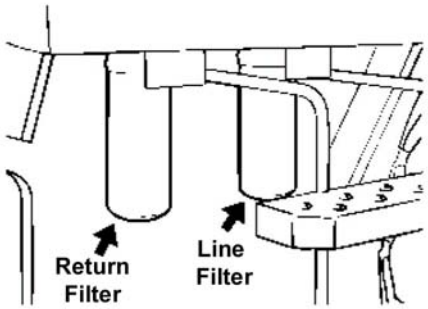
Check for loose directional control linkage nuts. If the nuts are loose, adjust the linkage and tighten the nuts. Apply grease and forward/reverse lever shaft.		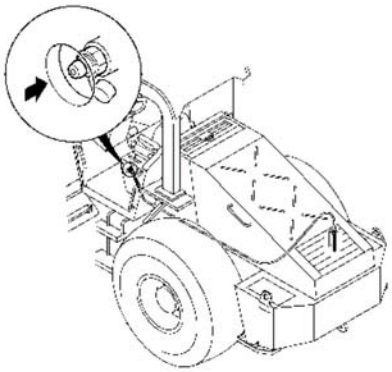
Maintenance Procedures Every 1,000 Hours **WARNING** **To reduce the possibility of personal injury, avoid direct contact of hot oil with your skin**. Remove the hydraulic tank drain plug. Drain the hydraulic oil. Remove the suction screen from the top of the hydraulic tank. Clean the inside of the hydraulic tank. Fill the hydraulic tank with hydraulic oil. Start and run the engine at idle for 2 to 5 minutes. When the hydraulic tank is free from air bubbles stop the engine and recheck the hydraulic tank oil level.		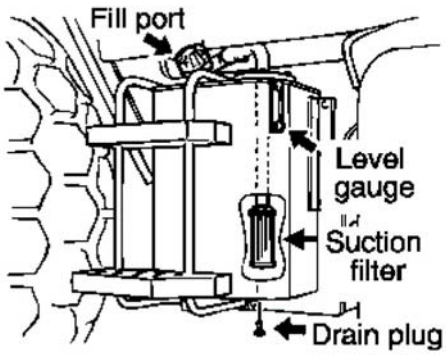

WARNING **To reduce the possibility of personal injury, avoid direct contact of hot oil with your skin.** **CAUTION** **To reduce the possibility of equipment damage, do not over fill the vibrator**. Rotate the roller until the drain plug is located at the bottom of the roller. Remove the drain plug, level gauge plug and filler plug. Drain the vibrator oil. Clean the vibrator. Install the drain plug and fill oil through the filler port until oil flows out of the level port. Install fill plug and level plug.		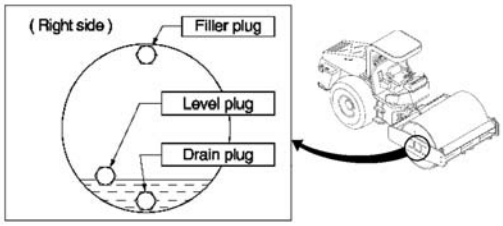
Position the roller so the drain plug of the drive motor is located at the bottom of the roller. Remove the drain plug from the hydraulic motor and drain the oil. Position the roller so the drain plug of the drive motor is located at the top of the roller. Remove the level plug. Fill the motor through the drain plug until oil flows out of the level plug. Install the drain plug and level plug.		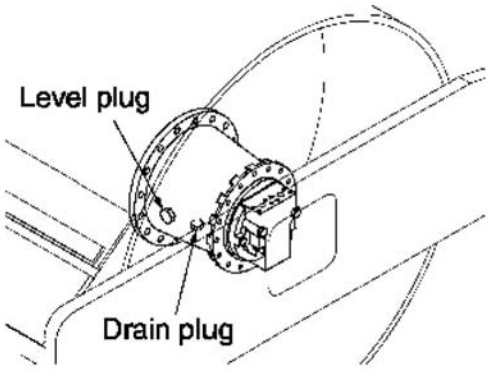
Remove the transmission gear reducer drain plug and drain the oil. Install the transmission gear reducer drain plug. Remove the transmission gear reducer fill and level plug. Fill with oil through the fill port until oil flow of the level port. Install fill and level plugs.		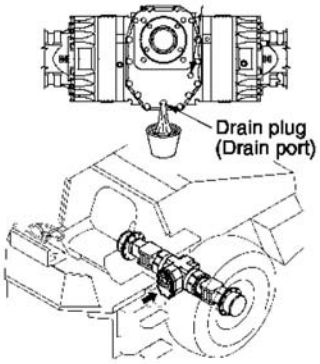

Rotate the wheels until the final drive drain plug is at the lowest position. Remove the drain plug and drain the oil. Rotate the wheels until the final drain plug is parallel with the ground. Fill the oil through the drain port until the oil flows out of the final drive. Install the drain plug.		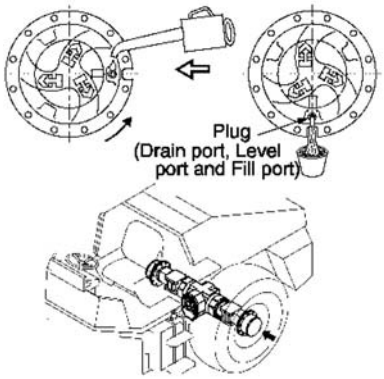
Remove the differential case drain plug, fill plug and level plug. Drain the oil. Install the drain plug. Fill the oil through the fill port until the oil flows out of the level port. Install the fill and level plugs.		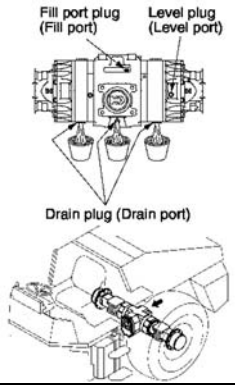

WARNING **To reduce the possibility of personal injury, wear safety glasses when removing and cleaning the air filter element**. **WARNING** **Wear appropriate eye and face protection when using compressed air. Flying debris and dirt can cause personal injury.** When the red float of the air filter restriction indicator reaches the service line the filter must be cleaned or replaced. Remove the clip for the air filter cover and turn the cover 12 degrees to remove Remove the air filter. Inspect the element for damage. If the element is damaged, it must be replaced. Place the element into the air filter housing and install the cover. Rotate the cover 12 degrees and install the clip Push the air filter restriction indicator to reset it.		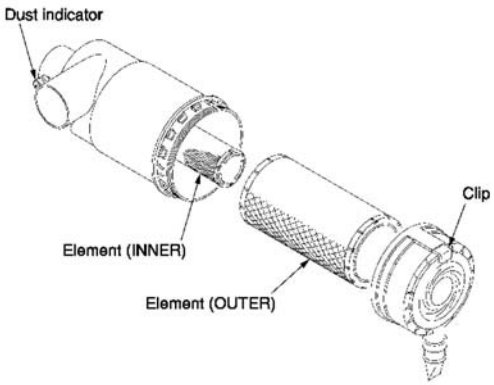
WARNING **Depending on the circumstance, diesel fuel is flammable. When inspecting or performing service or repairs on the fuel system, to reduce the possibility of fire and resulting severe personal injury, death or property damage, never smoke or allow sparks or flames (such as pilot lights, electrical switches, or welding equipment) in the work area**. Remove the drain plug from the fuel tank and remove all water and sediment. Clean and dry the fuel tank. Install the drain plug.		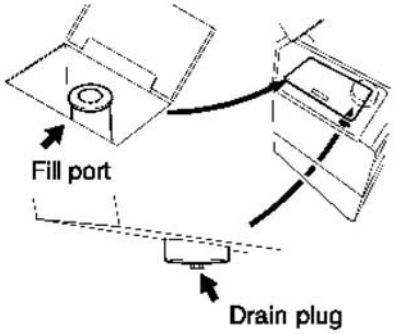

Not using a battery or leaving it in storage for a long period of time can cause battery plate damage. For long-term storage, tighten the battery cell caps, store in a cool dry location and check the level of charge monthly. Maintain a charge above 75%, In cold weather, start the engine with a battery charge at 100%. Do not attempt to start the engine with a battery charge below 75%.		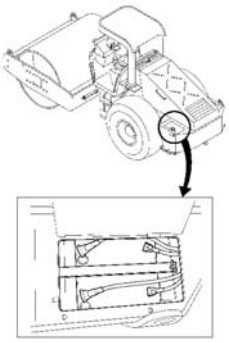

Long Term Storage

When winter is over, change the oil and fuel to comply with the weather. Refer to the Specifications section of this manual

WARNING

DO NOT OPERATE A DIESEL ENGINE WHERE THERE ARE OR CAN BE COMBUSTIBLE VAPORS. These vapors can be sucked through the air intake system and cause engine acceleration and over speeding that can result in a fire, an explosion, and extensive property damage. Numerous safety devices are available, such as air intake shutoff devices, to minimize the risk of over speeding where an engine, due to its application, is operating in a combustible environment, such as due to a fuel spill or gas leak. THE EQUIPMENT OWNER AND OPERATOR ARE RESPONSIBLE FOR SAFE OPERATION IN A HOSTILE ENVIRONMENT. CONSULT A CUMMINS AUTHORIZED REPAIR LOCATION FOR FURTHER INFORMATION.

WARNING

To reduce the possibility of personal injury, do not operate the compactor in an unventilated enclosed area. Diesel exhaust gases can kill. Make sure the space is ventilated adequately.

Long-term storage is defined as – Not operating the compactor for a period of 1 month or more.
For long term storage:

- Store the compactor in an enclosed area after cleaning.
- Service the compactor
- Lubricate exposed steering cylinder piston rods.
- Disconnect and store the battery.
- Place the compactor in readiness condition with parking brake set, forward/reverse lever in neutral and vibration control to OFF.
- Place chocks under tires of compactor.
- Remove the key from the starter switch.
- Operate the compactor 1 time a month.
- Disengage the parking brake 1 time a month.

Booster Cable Connection **WARNING** **To reduce the possibility of personal injury and equipment damage using booster cables:** • **Make sure the starter switch is in the OFF position.** • **Batteries emit explosive gasses. Do not smoke when working with batteries. Keep flames and sparks away from the battery.** • **Batteries can emit explosive gases. To reduce the possibility of personal injury, always ventilate the compartment before servicing the batteries. To reduce the possibility of arcing, remove the negative (-) battery cable first and attach the negative (-) battery cable last.** • **Acid is extremely dangerous and can damage the machinery and can also cause serious burns. Always provide a tank of strong soda water as a neutralizing agent when servicing the batteries. Wear goggles and protective clothing to reduce the possibility of serious personal injury.** • **Loose battery terminal can cause sparks. Make sure battery terminals are tight.** • **Do not allow the booster cable positive (+) and negative (-) ends to connect.** • **Wear safety goggles.** • **Use booster cables and clamps of the appropriate size.** • **Check the booster cables for damage. If the cables are damaged, they must not be used.**		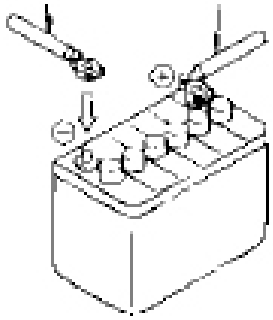
Connect Booster Cables • Connect one end of the positive (+) end of the booster cable to the positive (+) battery terminal on the compactor. • Connect the other end of the positive (+) booster cable to the positive (+) terminal of the booster supply. • Connect the negative (-) end of the booster cable to the negative (-) terminal of the booster supply. • Connect the other end of the negative (-) booster cable to chassis ground.		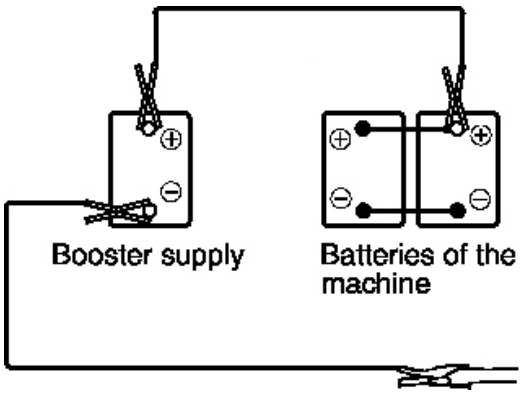

Disconnect Booster Cables: • Disconnect the negative (-) booster cable from chassis ground. • Disconnect the negative (-) booster cable from the negative (-) booster supply terminal. • Disconnect the positive (+) booster cable from the positive (+) booster supply terminal. • Disconnect the positive (+) booster cable from the positive (+) battery terminal.		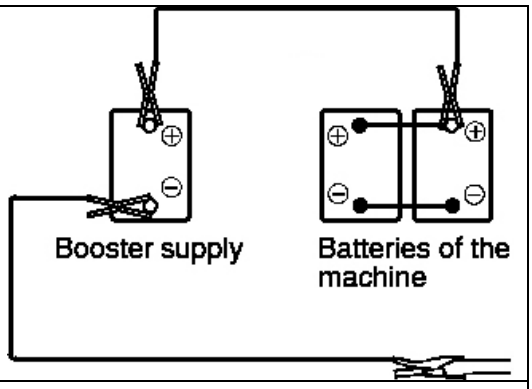

Testing and Adjustment

This section is divided into two procedures:

- Mechanical Adjustments – Adjustments to seat and scraper.
- Hydraulic Pump Testing and Adjustment – Testing and adjustment for the propulsion, steering and vibratory pumps.

Seat Adjustment

WARNING

To reduce the possibility of personal injury and equipment damage, the operator must adjust the seat correctly prior to operating the compactor.

To adjust the seat:

- Pull lever (1) and mover the seat forward or back.
- Turn the seat back rest dial (2) to increase or decrease seat back position.
- Move the suspension lever (3) to adjust the seat for operator weight.

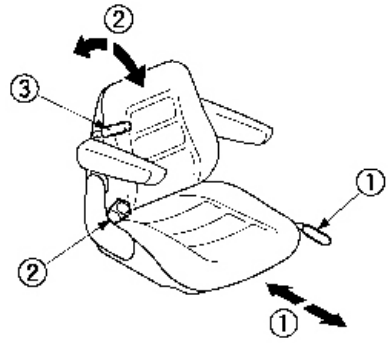

Scraper Adjustment

SV505D

To adjust the scraper:

- Loosen scraper mounting bolt and nuts.
- Adjust scraper to 20 mm [0.79 in] distance from the drum.
- Tighten bolts and nuts.

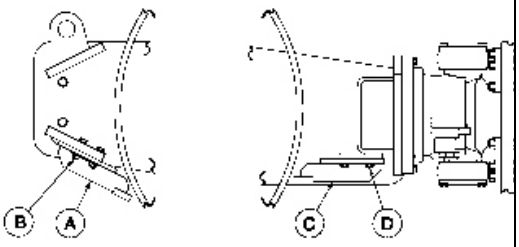

SV505T

To adjust scraper:

- Loosen scraper mounting bolts and nuts.
- Adjust scraper to 20 mm [0.79 in] distance from the drum.
- Tighten bolts and nuts.

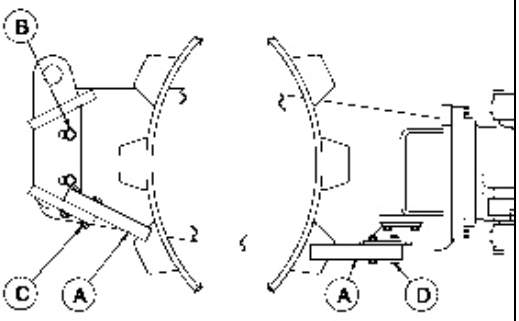

SV505TF To adjust scraper: • Loosen scraper mounting bolts and nuts. • Adjust scraper to 20 mm [0.79 in] distance from the drum. • Tighten bolts and nuts.		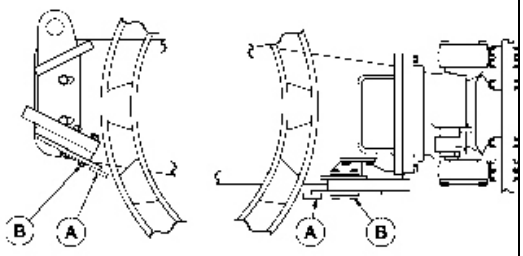
Measure Hydraulic Pressure Main Propulsion Circuit Install a 9/16 18UNF adapter (1) into the 0 to 60 MPa [0 to 9,000 psi] pressure gauge.		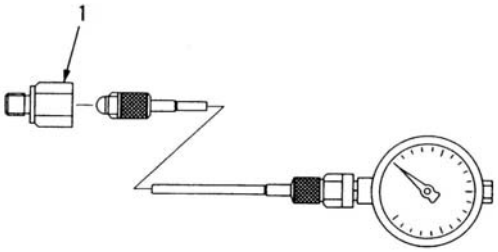
WARNING **To reduce the possibility of personal injury and equipment damage, the compactor must be on level ground with the parking brakes set and chocks under tires.** Park the compactor on level ground, set the parking brake and chock tires. The temperature of the hydraulic oil must 50° ± 5°C [122° ± 41°F]. Gauge port (1) is for forward travel. Gauge port (2) is for reverse travel. • Remove gauge port plug (1). • Install pressure adapter in gauge port (1). • Apply the parking brake. • Start the engine and set the engine speed change switch to the Full position. • Set the compactor speed switch to rabbit. • Move the forward/reverse lever to the reverse position and record the measurement (2.1 MPa [300 psi]). • Immediately move lever to neutral. • Repeat above steps for the forward travel pressure.		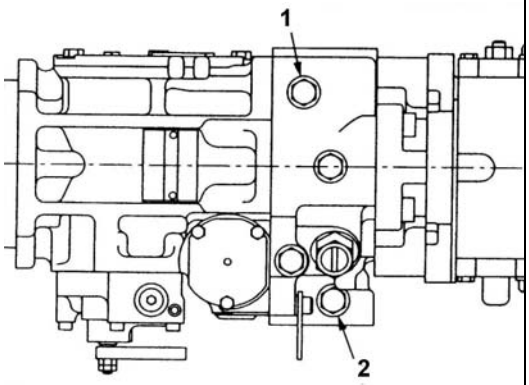

Adjust Hydraulic Pressure Main Propulsion Circuit Multi-function valve (1) is for forward travel. Multi-function valve (2) is for reverse travel. Each has an adjustment screw and it is secured by a lock nut. .		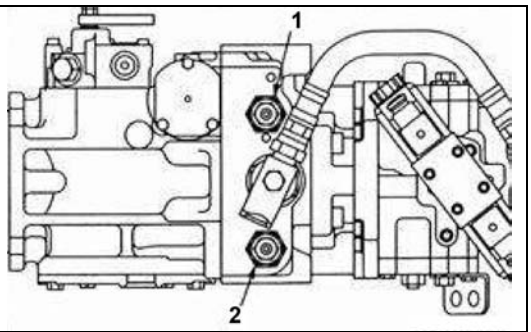
Rotating the adjusting screw: • Clockwise = increases pressure • Counter clockwise = decreases pressure. Loosen lock nut (4) on the forward travel multi-function valve adjustment screw (3). Increase or decrease pressure with ¼ turns of the adjustment screw. Rotate the adjustment screw. Complete the Measure Hydraulic Pressure Main Propulsion step and adjust pressure to 2.1 MPa [300 psi]. Tighten lock nut (4). Repeat step for the reverse travel. Torque Values: • (1) - 41 N●m [30 ft-lb] • (2) - 79 N●m [59 ft-lb] • (4) - 9 N●m [79-in-lb]. Replace damaged parts.		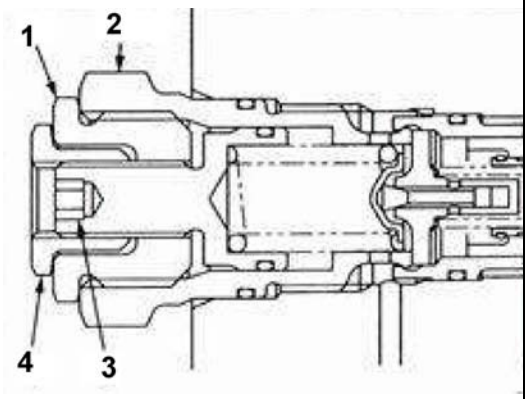

Measure Propulsion Charge Pressure Install a 9/16 18UNF adapter (1) into the 0 to 5 MPa [0 to 700 psi] pressure gauge.		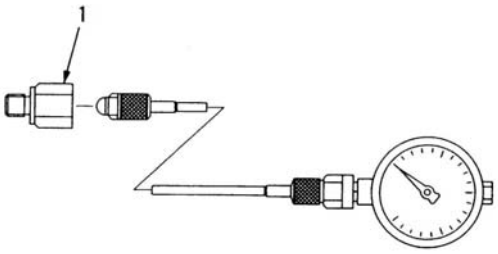
WARNING **To reduce the possibility of personal injury and equipment damage, the compactor must be on level ground with the parking brakes set and chocks under tires.** Park the compactor on level ground, set parking brake and chock tires. The hydraulic oil is supplied to the propulsion charge circuit through the steering circuit. Make sure the steering circuit works properly. • Remove the gauge port plug (1) from the hydraulic pump. • Install the pressure gauge into the adapter. • Start the engine and set the engine speed change switch to the Full position. • Move the forward/reverse lever slightly forward and back. The pressure will vary. • Record the maximum pressure reading (0.29 MPa [41 psi]).		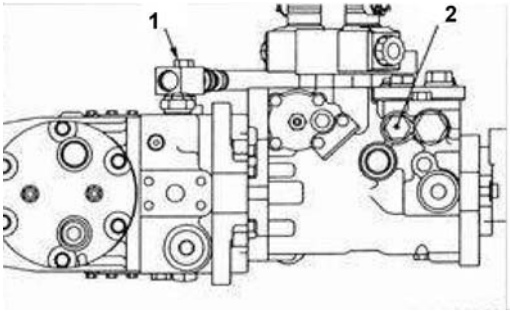
Adjust Main Propulsion Charge Pressure Rotating the adjusting screw: • Clockwise = increase pressure • Counter Clockwise = decrease pressure. I Increase or decrease pressure in ¼ turns of the screw. Loosen lock nut (2) and rotate the adjusting screw (3). Complete the Measure Main Propulsion Charge Pressure step. Pressure is 0.29 MPa [41 psi]. Tighten the lock nut (2): 51 N●m [37 ft-lb]		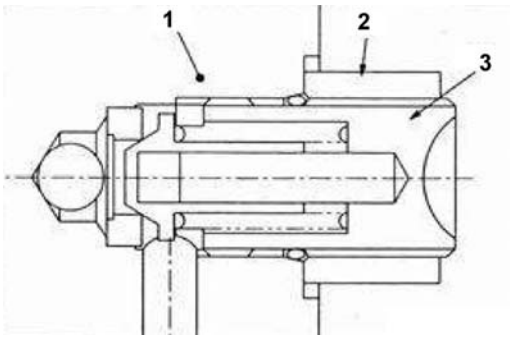

Measure Parking Brake Release Pressure Install gauge adapter into the 0 to 5 MPa [0 to 700 psi] pressure gauge.		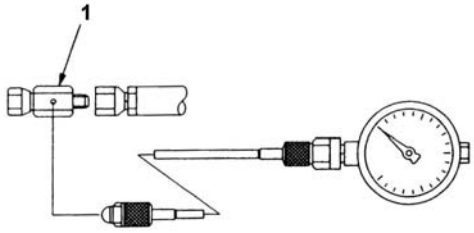
WARNING **To reduce the possibility of personal injury and equipment damage, the compactor must be on level ground with the parking brakes set and chocks under tires.** Park compactor on level ground, set the parking brake and chock the tires. The temperature of the hydraulic oil must be 50° ± 5°C [122° ± 41°F]. • Disconnect brake release hose (1) or (2). • Start the engine and set the engine speed change switch to the Full position. • Make sure the forward/reverse lever is in the neutral position. • Press the parking brake set button and record the pressure. Pressure = 0 to 5 MPa [0 to 700 psi].		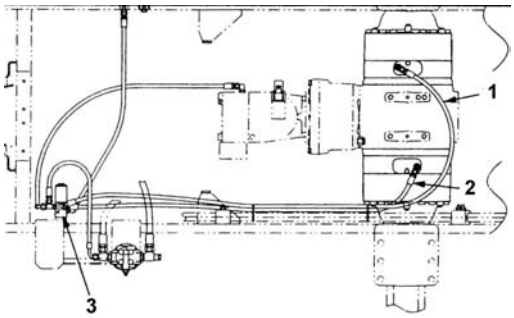
Measure Vibrator Circuit Pressure Install the 7/16 – 20UNF adapter onto a 0 to 40 MPa [0 to 9,000] psi gauge.		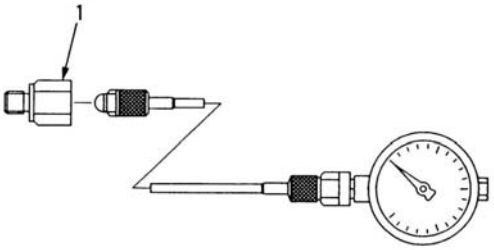

WARNING **To reduce the possibility of personal injury and equipment damage, the compactor must be on level ground with the parking brakes set and chocks under tires.** Park the compactor on level ground, set the parking brake and chock tires. The temperature of the hydraulic oil must 50° ± 5°C [122° ± 41°F]. Gauge port (1) is for high amplitude vibration. Gauge port (2) is for low amplitude vibration. High amplitude vibration: • Remove plug (1) from the high-pressure hose elbow. • Install gauge and adapter. • Disconnect and blank off high-pressure vibration pump hose. • Cover the high-pressure pump port. • Start engine and set the engine speed change switch to FULL position. • Turn the Vibrator Control switch to the forward/reverse lever position. • Push the vibration button on the forward/reverse lever. • Measure the pressure 0 to 5 MPa [700 psi]. • Immediately press the vibration control button on the forward/reverse lever to disengage the vibration pump. Repeat the steps for the low amplitude vibration port (1).		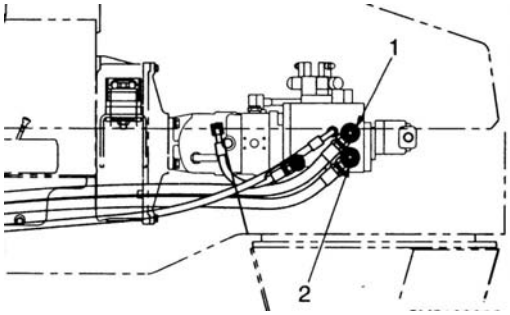
Adjust Vibrator Circuit Pressure The high amplitude relief valve (2) and the low amplitude relief valve (3) are not adjustable. The valves must be replaced.		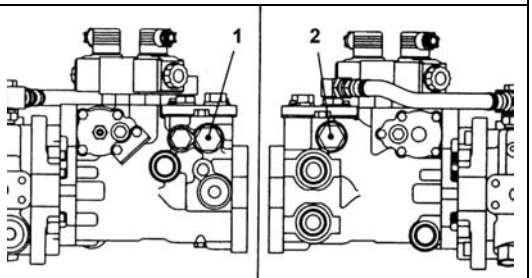

Loosen the lock nut (1) on the defective relief valve. Remove the relief valve. Install a new relief valve and tighten the lock nut 176 N●m [130 ft-lb].		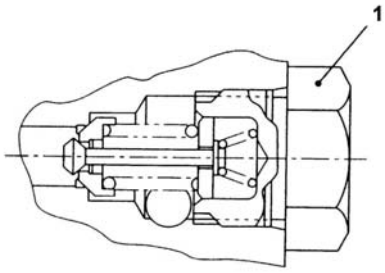
Measure Vibrator Charge Pressure Install a 9/16 18UNF adapter (1) into the 0 to 5 MPa [0 to 700 psi] pressure gauge.		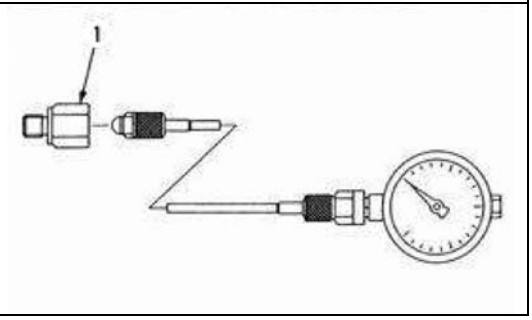

⚠ WARNING **To reduce the possibility of personal injury and equipment damage, the compactor must be on level ground with the parking brakes set and chocks under tires.** Park the compactor on level ground, set the parking brake and chock the tires. Make sure the forward/reverse lever is in the neutral position. The steering circuit supplies the vibrator circuit. Make sure the steering circuit functions correctly. The vibrator charge circuit connects, in parallel, to the propulsion circuit. The propulsion relief valve must be blocked by fully adjusting the screw. . • Adjust and record the amount of turns for propulsion relief valve adjusting screw • Remove the gauge port plug (1) from the hydraulic pump. • Install the pressure gauge into the adapter. • Start the engine and set the engine speed change switch to the Full position. • Move the forward/reverse lever slightly forward and back. The pressure will vary. • Record the maximum pressure reading (0 to 5 MPa [700 psi]).		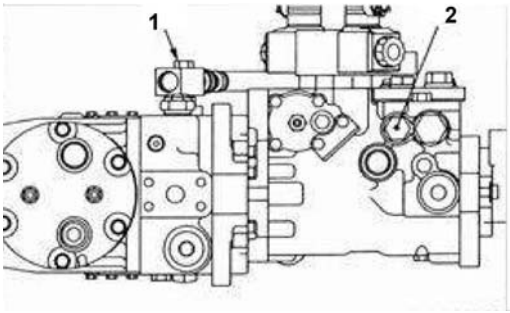
Adjust Vibrator Charge Pressure The vibrator charge relief valve is not adjustable. The relief valve must be replaced. • Loosen the lock nut (1) on the defective relief valve. • Remove the relief valve. • Install a new relief valve and tighten the lock nut 74 N●m [54 ft-lb].		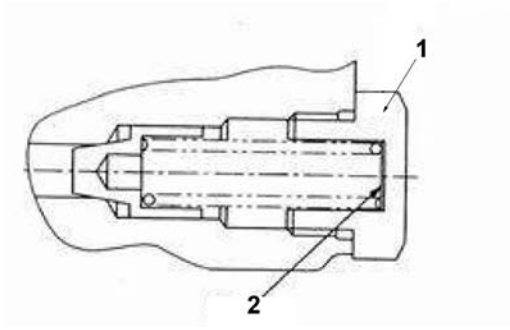

Measure Steering Circuit Pressure Install an adapter (1) into the 0 to 25 MPa [0 to 3,500 psi] pressure gauge.		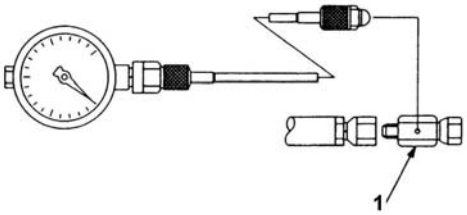
WARNING **To reduce the possibility of personal injury and equipment damage, the compactor must be on level ground with the parking brakes set and chocks under tires.** The steering circuit routes return oil to the propulsion charge circuit. Make sure the propulsion charge circuit is operating correctly. Park the compactor on level ground, set the parking brake and chock the tires. Make sure the forward reverse lever is in the neutral position. The temperature of the hydraulic oil must be 50° ± 5°C [122° ± 41°F]. • Start the engine and turn the engine speed change switch to the FULL position. • Rotate the steering wheel to the full lock position and measure the pressure. Do not allow the relief valve to stay open for more than three seconds. There is no adjustment for the steering circuit relief valve. If the relief valve is faulty, it must be replaced.		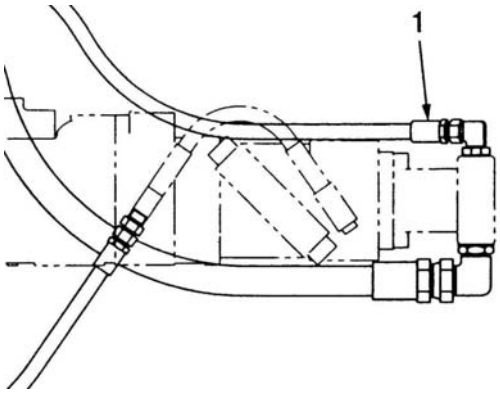

Adjust Forward/Reverse Lever Cable

When the pump fails to stay in neutral position or the forward/reverse cable has been replaced, the cable will need to be adjusted.

Secure the propulsion lever (2) in the neutral position.

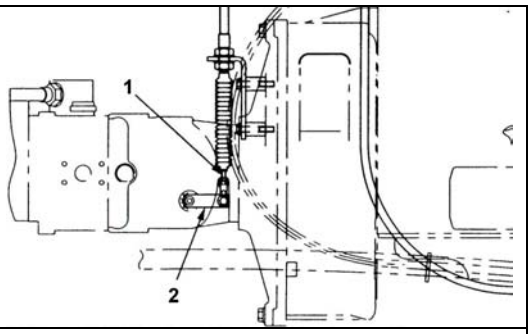

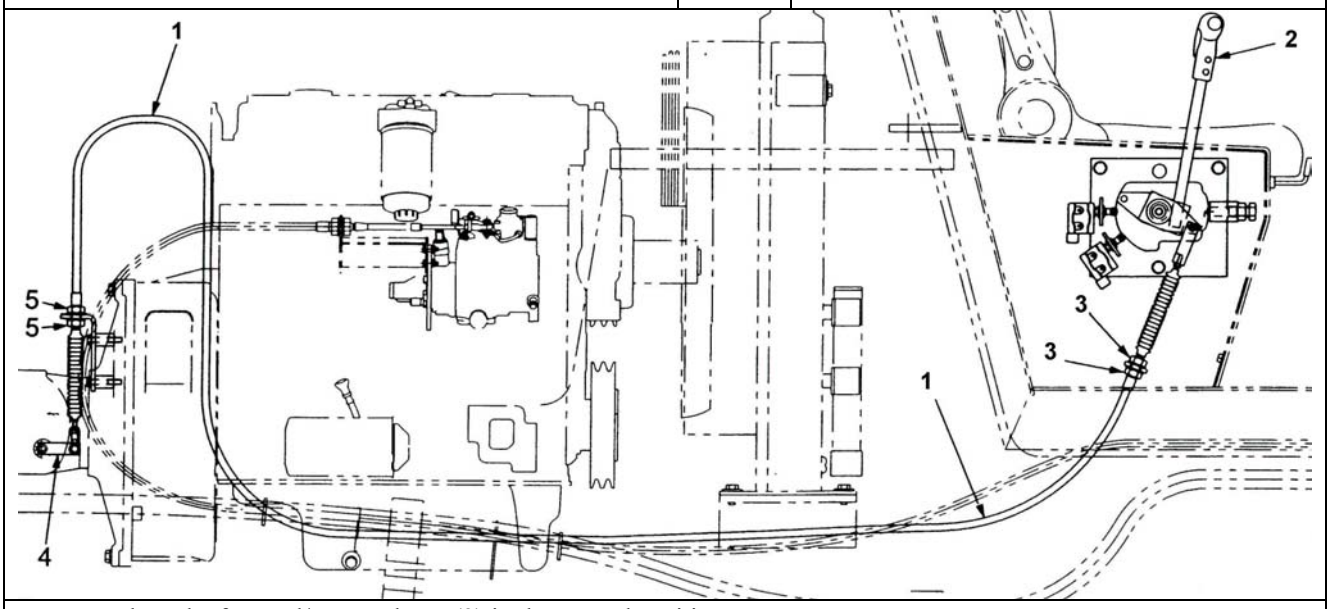

- Place the forward/reverse lever (2) in the neutral position.
- Connect cable (1) using nuts (3). Tighten the nuts.
- Move the forward/reverse lever through the full extent of travel (complete forward/complete back), making sure the propulsion lever follows the forward/reverse lever movement.
- Adjust the neutral position by rotating the nuts (5) while moving the forward/reverse lever slowly through the full range of travel. When adjusted correctly the forward/reverse lever movement should engage the desired motion equal points.

Troubleshooting Guidelines

DANGER

To reduce the possibility of personal injury and equipment damage, adhere to all safety warnings in this manual. Understand the General Safety Instructions procedure prior to beginning troubleshooting.

WARNING

To reduce the possibility of personal injury and equipment damage, park the compactor on level ground, engage parking brake, set safety pins and chock the wheels prior to troubleshooting.

WARNING

To reduce the possibility of personal injury and equipment damage, do not allow unauthorized personnel in the work area and use pre-determined hand signals to communicate with teammates.

A thorough knowledge of the compactor operation is required prior to beginning the troubleshooting of a suspected problem. The technician/operator/owner must read and understand the Identification, Operation and Maintenance Sections of this manual. In addition all safety guidelines must be followed when performing troubleshooting steps. Adhere to all safety guidelines in the Safety Section of this manual.

The style of troubleshooting in this manual is Symptom based. The technician will match the compactor symptom with the symptoms in the Troubleshooting section of this manual.

The first page of the troubleshooting tree covers basics on the symptom. A Summary page follows. The Summary page gives a brief summary of the steps to repair the symptom. The troubleshooting pages follow. Start with Step 1 and follow completely through the tree until the symptom is repaired.

It is not possible to include all of the solutions to problems that can occur; however, these trees are designed to stimulate a thought process that will lead to the cause and repair of a symptom.

The wiring diagram and hydraulic schematics have been designed and are required to perform troubleshooting.

Follow these basic steps when troubleshooting compactor symptoms:

- Get all of the facts concerning the complaint
- Analyze the problem thoroughly
- Relate the symptoms to the systems and components
- Consider any recent maintenance or repair action prior to the symptom
- Double-check before beginning any disassembly
- Solve the problem by using the symptom driven troubleshooting trees
- Determine the cause of the problem and make a repair
- After the repairs have been made, operate the compactor to verify the cause of the symptom has been repaired.

Wiring Diagram Color Codes

Wiring Diagram
The wiring diagram is created in basic colors for ease of individual circuit identification. The colors represent circuit type. Below are the colors for the circuits in the wiring diagram:

- Red – DC voltage
- Blue – Input signals
- Black – Ground, shields and returns
- Purple – Output signals
- Green – Datalinks (ECM communication wire).

NOTE: These are not the colors of the wires on the compactor.

The wire color alpha symbol is located on the wiring diagram in parentheses, following the name of the wire. The table below converts the alpha symbol on the wiring diagram to the color combination of the wire on the compactor.

Symbol on Wiring Diagram	Wire Color on Compactor
B	Black
BR	Black with Red stripe
BW	Black with White stripe
BY	Black with Yellow stripe
Br	Brown
BrB	Brown with Black stripe
BrR	Brown with Red stripe
BrW	Brown with White stripe
BrY	Brown with Yellow stripe
G	Green
GB	Green with Black stripe
GL	Green with Blue stripe
GR	Green with Red stripe
GW	Green with White stripe
GY	Green with Yellow stripe
L	Blue
LR	Blue with Red stripe
LW	Blue with White stripe
LY	Blue with Yellow stripe
Lg	Light Green
LgB	Light Green with Black stripe
LgR	Light Green with Red stripe
LgW	Light Green with White stripe
LgY	Light Green with Yellow stripe
R	Red
RB	Red with Black stripe
RG	Red with Green stripe
RL	Red with Blue stripe
RW	Red with White stripe
RY	Red with Yellow stripe
W	White
WB	White with Black stripe
WL	White with Blue stripe
WR	White with Red stripe

Symbol on Wiring Diagram	Wire Color on Compactor
WY	White with Yellow stripe
Y	Yellow
YB	Yellow with Black stripe
YG	Yellow with Green stripe
YL	Yellow with Blue stripe
YR	Yellow with Red stripe
YW	Yellow with White stripe
Gy	Gray
O	Orange
Sb	Sky Blue
P	Pink

Engine Warning Lamp is Illuminated

WARNING

To reduce the possibility of personal injury and equipment damage, always shut down the compactor when the Engine Warning Lamp is illuminated.

Symptoms
Under normal operation, the engine warning lamp will illuminate when the key switch is energized and extinguish when the engine has started.
Because of the engine software, when the engine warning lamp is illuminated one or more of the following symptoms can be observed:

- The engine can be hard to start, not start or shut down after starting.
- The engine can run at reduced performance increasing with time until engine shut down.
- The engine can run with no performance issues.

How to Use This Troubleshooting Procedure
This symptom tree can be used to troubleshoot an Engine Warning Lamp Illuminated condition. Start by performing Step 1 troubleshooting. Step 1 will ask a series of questions and will provide a list of troubleshooting steps to be performed depending on the symptom.

Shop Talk
The engine is an electronically controlled engine. It is monitored and controlled by the ECM (Electronic Control Module). The engine warning lamp is considered to be a low side driver circuit with the controls located within the ECM software. In this case, the ECM supplies a return path that allows the lamp to illuminate when there is an engine warning condition. The circuit can be viewed as a normally open switch that closes on the command of the ECM.

There are three different alarm classifications within ECM, as a rule of thumb they can be stated as follows:

- Maintenance – When the ECM detects a maintenance issue is present.
- Warning – When the ECM detects an alarm condition is present.
- Shut Down – The ECM commands the engine to shutdown. The operator must initiate the shutdown for safety purposes.

There are two switches that can be used for preliminary troubleshooting:

- Diagnostic ON/OFF switch – Allows for the technician to enter the diagnostic mode of the engine ECM.
- Diagnostic Increment/Decrement – Allows the technician to scroll through the fault codes.

Once the engine is placed in the diagnostic mode, the engine warning lamp will flash a fault code. Each code can be up to four digits in length. After the flash out is complete, it will repeat itself. When the increment/decrement (momentary) switch is moved to the increment position the ECM will broadcast the next fault code. Moving the increment/decrement switch to the decrement position will scroll to the previous viewed fault code.

Troubleshooting Summary

STEP 1: Check for Active Fault Code(s)
- STEP 1A: Check Lamp Illumination
- STEP 1B: Check for Active Fault Code(s)

STEP 2: Check Wiring Harness
- STEP 2A: Inspect Wiring Harness Connector
- STEP 2B: Check Engine Warning Lamp Wire

STEP 1: Check for Active Fault Code(s)		
STEP 1A: Check Lamp Illumination		
Condition: - Start the engine.		
Action	**Specifications / Repair**	**Next Step**
The engine warning lamp will illuminate when the key switch is energized and extinguish when the engine has started.	**Did engine start and lamp extinguish?** **Yes** **Repair** Normal operation of the compactor.	Repair Complete
	Did engine start and lamp extinguish? **No**	1B

STEP 1B: Check for Active Fault Code(s)		
Condition: - Turn keyswitch to ON position. - Remove diagnostic switch access cover on steering column.		
Action	**Specifications / Repair**	**Next Step**
Verify active fault codes: • Place the diagnostic ON/OFF switch into the ON position. • Check engine warning lamp.	**Engine warning lamp flashing fault codes?** **Yes** **Repair** Contact the nearest Cummins® Authorized Repair Facility for engine faults. .	Repair Complete
	Engine warning lamp flashing fault codes? **No**	2A

STEP 2 Check Wiring Harness		
STEP 2A: Inspect Wiring Harness Connector		
Condition: - Key switch OFF - Disconnect ECM 50-pin connector (compactor harness connector).		
Action	**Specifications / Repair**	**Next Step**
Inspect the 50-pin connector for the following: • Loose connector • Corroded pins • Bent or broken Pins • Pushed back or expanded pins • Moisture in or on the connector • Missing or damaged connector seals • Dirt or debris in or on the connector pins • Connector shell broken • Wire insulation damage • Damaged connector locking tab.	**Connector Dirty or Damaged?** **Yes** **Repair** Clean, repair or replace the connector.	Repair Complete
	Connector Dirty or Damaged? **No**	2B

STEP 2B: Check Engine Warning Lamp Wire		
Condition: - Key switch OFF - Disconnect ECM 50-pin connector (compactor harness connector).		
Action	**Specifications / Repair**	**Next Step**
Check for a warning lamp wire short: • Place the positive multimeter test lead on the warning lamp pin in the ECM wiring harness connector. • Place the negative multimeter test lead on the wait to start lamp pin in the ECM wiring harness connector. • Record the resistance reading. • Move the negative multimeter test lead to the remaining pins in the connector and repeat the process.	**Greater than 100 K ohms?** **Yes** **Repair** Contact the nearest Cummins® Authorized Repair Facility to replace ECM.	Repair Complete
	Greater than 100 K ohms? **No** **Repair** Replace the wire.	Repair Complete

Engine Stop Lamp is Illuminated

WARNING

To reduce the possibility of personal injury and equipment damage, always shut down the compactor when the Engine Warning Lamp is illuminated.

Symptoms
Under normal operation, the engine stop lamp will illuminate when the key switch is energized and extinguish when the engine has started.
Because of the engine software, when the engine warning lamp is illuminated one or more of the following symptoms can be observed:

- The engine can be hard to start, not start or shut down after starting.
- The engine can run at reduced performance increasing with time until engine shutdown.
- The engine can run with no performance issues.

How to Use This Troubleshooting Procedure
This symptom tree can be used to troubleshoot an Engine Warning Lamp Illuminated condition. Start by performing Step 1 troubleshooting. Step 1 will ask a series of questions and will provide a list of troubleshooting steps to be performed depending on the symptom.

Shop Talk
The engine is an electronically controlled engine. It is monitored and controlled by the ECM (Electronic Control Module). The engine stop lamp is considered to be a low side driver circuit with the controls located within the ECM software. In this case, the ECM supplies a return path that allows the lamp to illuminate when there is an engine stop condition. The circuit can be viewed as a normally open switch that closes on the command of the ECM.

There are three different alarm classifications within ECM, as a rule of thumb they can be stated as follows:

- Maintenance – When the ECM detects a maintenance issue is present.
- Warning – When the ECM detects an alarm condition is present.
- Shut Down – The ECM commands the engine to shutdown. The operator must initiate the shutdown for safety purposes.

There are two switches that can be used for preliminary troubleshooting:

- Diagnostic ON/OFF switch – Allows for the technician to enter the diagnostic mode of the engine ECM.
- Diagnostic Increment/Decrement – Allows the technician to scroll through the fault codes.

Once the engine is placed in the diagnostic mode, the engine stop lamp will flash a fault code. Each code can be up to four digits in length. After the flash out is complete, it will repeat itself. When the increment/decrement (momentary) switch is moved to the increment position the ECM will broadcast the next fault code. Moving the increment/decrement switch to the decrement position will scroll to the previous viewed fault code.

Troubleshooting Summary

STEP 1: Check for Active Fault Code(s)
- STEP 1A: Check Lamp Illumination
- STEP 1B: Check for Active Fault Code(s)

STEP 2: Check Wiring Harness
- STEP 2A: Inspect Wiring Harness Connector
- STEP 2B: Check Engine Stop Lamp Wire

STEP 1: Check for Active Fault Code(s)		
STEP 1A: Check Lamp Illumination		
Condition: - Start the engine.		
Action	**Specifications / Repair**	**Next Step**
The engine stop lamp will illuminate when the key switch is energized and extinguish when the engine has started.	**Did engine stop and lamp extinguish?** **Yes** **Repair** Normal operation of the compactor.	Repair Complete
	Did engine stop and lamp extinguish? **No**	1B

STEP 1B: Check for Active Fault Code(s)		
Condition: - Turn keyswitch to ON position. - Remove diagnostic switch access cover on steering column.		
Action	**Specifications / Repair**	**Next Step**
Verify active fault codes: • Place the diagnostic ON/OFF switch into the ON position. • Check engine stop lamp.	**Engine stop lamp flashing fault codes?** **Yes** **Repair** Contact the nearest Cummins® Authorized Repair Facility for engine faults. .	Repair Complete
	Engine stop lamp flashing fault codes? **No**	2A

STEP 2 Check Wiring Harness		
STEP 2A: Inspect Wiring Harness Connector		
Condition: - Key switch OFF - Disconnect ECM 50-pin connector (compactor harness connector).		
Action	**Specifications / Repair**	**Next Step**
Inspect the 50-pin connector for the following: • Loose connector • Corroded pins • Bent or broken Pins • Pushed back or expanded pins • Moisture in or on the connector • Missing or damaged connector seals • Dirt or debris in or on the connector pins • Connector shell broken • Wire insulation damage • Damaged connector locking tab.	**Connector Dirty or Damaged?** **Yes** **Repair** Clean, repair or replace the connector.	Repair Complete
	Connector Dirty or Damaged? **No**	2B

STEP 2B: Check Engine Warning Lamp Wire		
Condition: - Key switch OFF - Disconnect ECM 50-pin connector (compactor harness connector).		
Action	**Specifications / Repair**	**Next Step**
Check for a warning lamp wire short: • Place the positive multimeter test lead on the engine stop lamp pin in the ECM wiring harness connector. • Place the negative multimeter test lead on the wait to start lamp pin in the ECM wiring harness connector. • Record the resistance reading. • Move the negative multimeter test lead to the remaining pins in the connector and repeat the process.	**Greater than 100 K ohms?** **Yes** **Repair** Contact the nearest Cummins® Authorized Repair Facility to replace the ECM.	Repair Complete
	Greater than 100 K ohms? **No** **Repair** Replace the wire.	Repair Complete

Wait to Start Lamp is Illuminated

CAUTION

To reduce the possibility of equipment damage, do not attempt to start the engine when the wait to start lamp is illuminated.

Symptoms
The ECM performs a system diagnostics check on the engine when the key switch is turned to the ON position. The wait to start lamp will remain illuminated while the diagnostics is in process. If the lamp does not extinguish in 30 seconds, the operator should not attempt to start the engine.

How to Use This Troubleshooting Procedure
This symptom tree can be used to troubleshoot a Wait to Start Lamp is Illuminated condition. Start by performing Step 1 troubleshooting. Step 1 will ask a series of questions and will provide a list of troubleshooting steps to be performed depending on the symptom.

Shop Talk
The engine is an electronically controlled engine. It is monitored and controlled by the ECM (Electronic Control Module). The wait to start lamp is considered to be a low side driver circuit with the controls located within the ECM software. In this case, the ECM supplies a return path that allows the lamp to illuminate when the ECM is in the diagnostic mode. The circuit can be viewed as a normally open switch that closes on the command of the ECM.

There are two switches that can be used for preliminary troubleshooting:

- Diagnostic ON/OFF switch – Allows for the technician to enter the diagnostic mode of the engine ECM.
- Diagnostic Increment/Decrement – Allows the technician to scroll through the fault codes.

Once the engine is placed in the diagnostic mode, the engine stop lamp will flash a fault code. Each code can be up to four digits in length. After the flash out is complete, it will repeat itself. When the increment/decrement (momentary) switch is moved to the increment position the ECM will broadcast the next fault code. Moving the increment/decrement switch to the decrement position will scroll to the previous viewed fault code.

Troubleshooting Summary

STEP 1: Check for Active Fault Code(s)
- STEP 1A: Check Lamp Illumination
- STEP 1B: Check for Active Fault Code(s)

STEP 2: Check Wiring Harness
- STEP 2A: Inspect Wiring Harness Connector
- STEP 2B: Check Wait to Start Lamp Wire

STEP 1: Check for Active Fault Code(s)		
STEP 1A: Check Lamp Illumination		
Condition: - Turn the key switch to the ON position.		
Action	**Specifications / Repair**	**Next Step**
The wait to start lamp will illuminate when the key switch is energized and extinguish when the ECM has completed the diagnostics.	**Did wait to start lamp extinguish?** **Yes** **Repair** Normal operation of the compactor.	Repair Complete
	Did wait to start lamp extinguish? **No**	1B

STEP 1B: Check for Active Fault Code(s)		
Condition: - Turn keyswitch to ON position. - Remove diagnostic switch access cover on steering column.		
Action	**Specifications / Repair**	**Next Step**
Verify active fault codes: • Place the diagnostic ON/OFF switch into the ON position. • Check engine stop and engine warning lamps for fault code flash outs.	**Engine stop and engine warning lamp flashing fault codes?** **Yes** **Repair** Contact the nearest Cummins® Authorized Repair Facility for engine faults.	Repair Complete
	Engine stop and engine warning lamp flashing fault codes? **No**	2A

STEP 2 Check Wiring Harness		
STEP 2A: Inspect Wiring Harness Connector		
Condition: - Key switch OFF - Disconnect ECM 50-pin connector (compactor harness connector).		
Action	**Specifications / Repair**	**Next Step**
Inspect the 50-pin connector for the following: • Loose connector • Corroded pins • Bent or broken Pins • Pushed back or expanded pins • Moisture in or on the connector • Missing or damaged connector seals • Dirt or debris in or on the connector pins • Connector shell broken • Wire insulation damage • Damaged connector locking tab.	**Connector Dirty or Damaged?** **Yes** **Repair** Clean, repair or replace the connector.	Repair Complete
	Connector Dirty or Damaged? **No**	2B

STEP 2B: Check Wait to Start Lamp Wire		
Condition: - Key switch OFF - Disconnect ECM 50-pin connector (compactor harness connector).		
Action	**Specifications / Repair**	**Next Step**
Check for a warning lamp wire short: • Place the positive multimeter test lead on the wait to start lamp pin in the ECM wiring harness connector. • Place the negative multimeter test lead on the engine stop lamp pin in the ECM wiring harness connector. • Record the resistance reading. • Move the negative multimeter test lead to the remaining pins in the connector and repeat the process.	**Greater than 100 K ohms?** **Yes** **Repair** Contact the nearest Cummins® Authorized Repair Facility to replace the ECM.	Repair Complete
	Greater than 100 K ohms? **No** **Repair** Replace the wire.	Repair Complete

Vibration Lamp Does Not Illuminate When Vibration Engaged

Symptoms
The vibration lamp on the combination meter does not illuminate when the high or low amplitude is engaged.

How to Use This Troubleshooting Procedure
This symptom tree can be used to troubleshoot a Vibration Lamp Does Not Illuminate When Vibration Engaged. Start by performing Step 1 troubleshooting. Step 1 will ask a series of questions and will provide a list of troubleshooting steps to be performed depending on the symptom.

Shop Talk

The vibration lamp is illuminated when the high or low amplitude switch is engaged. When the keyswitch is turned to the ON position. 12 VDC is supplied from the fuse box to the throttle switch.

When the throttle switch is moved to the high speed position a 12 VDC signal is sent, in parallel, to the throttle relay, and vibration amplitude switch.

When the vibration amplitude switch is moved to the low position a 12 VDC signal is transmitted to the vibration solenoid valve. When the vibration amplitude switch is moved to the high position a 12 VDC signal is transmitted to a separate pin on the vibration solenoid.

A diode unit is connected in parallel with the solenoid valve. This allows a 12 VDC signal to be transmitted to the diode unit in high and low vibration amplitude.

When the diode receives 12 VDC signal form the vibration amplitude switch, a signal is transmitted to the vibrator lamp in the combination meter.

Troubleshooting Summary

STEP 1: Will the Engine Run Full Speed
- STEP 1A: Check Engine Full Speed Operation

STEP2: Does the Compactor Operate in High and Low Amplitude Vibration
- STEP 2A: Operate Compactor at Low Amplitude Vibration
- STEP 2B: Operate Compactor at High Amplitude Vibration

STEP 3: Check Vibration Lamp
- STEP 1A: Check Vibration Lamp

STEP 4: Check Harness Connectors
- STEP 4A: Check Connectors for Damage

STEP 5: Check Vibration Lamp Wires
- STEP 5A: Check Supply Wire From Vibration Lamp to Diode Unit
- STEP 5B: Check Wire From Diode Unit to Low Side Input of Vibration Solenoid
- STEP 5C: Check Wire From Diode Unit to High Side Input of Vibration Solenoid

STEP 6: Check Diode Unit
- STEP 6A: Check Compactor Low Amplitude Side of Diode
- STEP 6B: Check Compactor High Amplitude Side of Diode

STEP 1: Will Engine Run at Full Speed		
STEP 1A: Check Full Speed Operation		
Condition: - Start the engine. - Move the engine speed change switch to the FULL position.		
Action	**Specifications / Repair**	**Next Step**
Check for engine speed indication on tachometer.	**Did the engine reach full speed?** **Yes**	2A
	Did the engine reach full speed? **No** **Repair** Refer to the Engine Will Not Reach Rated Speed troubleshooting tree.	Repair Complete

STEP 2: Does the Compactor Operate in High and Low Vibration		
STEP 2A: Operate Compactor at Low Amplitude Vibration		
Condition: - Start the engine. - Move the engine speed select switch to the full position. - Set the vibration amplitude switch to the minimum setting. - Turn the vibration selector switch to the CONT. position.		
Action	**Specifications / Repair**	**Next Step**
The vibration motor reverses causing the counterweight of the shaft to move to the low amplitude vibration position.	**Did Low Amplitude Vibration Engage?** **Yes** .	2B
	Did Low Amplitude Vibration Engage? **No** **Repair** Refer to the Minimum Vibration Setting Does Not Work troubleshooting tree.	Repair Complete

STEP 2B: Operate Compactor at High Amplitude Vibration		
Condition: - Start the engine. - Move the engine speed select switch to the full position. - Set the vibration amplitude switch to the high setting. - Turn the vibration selector switch to the CONT. position.		
Action	**Specifications / Repair**	**Next Step**
The vibration motor reverses causing the counterweight of the shaft to move to the low amplitude vibration position. .	**Did High Amplitude Vibration Engage?** **Yes** .	3A
	Did High Amplitude Vibration Engage? **No** **Repair** Refer to the Maximum Vibration Setting Does Not Work troubleshooting tree.	Repair Complete

STEP 3: Check Vibration Lamp		
STEP 3A: Replace Vibration Lamp		
Condition: - Key switch OFF - Remove operator's station front cover. Refer to the Combination Meter procedure in the Compactor Repair Section.		
Action	**Specifications / Repair**	**Next Step**
Replace Vibration Lamp with known good lamp. • Twist the vibration lamp connector out of the combination meter. • Place a new or known good lamp in the connector and install into combination meter. • Operate compactor in vibration mode.	**Did Vibration Lamp Illuminate?** **Yes** **Repair** Faulty vibration lamp.	Repair Complete
	Did Vibration Lamp Illuminate? **No**	4A

STEP 4: Check Harness Connectors		
STEP 4A: Check Connectors for Damage		
Condition: - Key switch OFF - Open access door on steering column. The diode unit is located on the door. Refer to the Operator's Station Relays and Diode procedure in the Compactor Repair section for diode unit location. - Disconnect the wiring harness from the diode unit. - Remove operator's station front cover. Refer to the Combination Meter procedure in the Compactor Repair Section. - Disconnect the Combination Meter 6-pin A wire harness connector from the combination meter.		
Action	**Specifications / Repair**	**Next Step**
Inspect the connectors for the following: • Loose connector • Corroded pins • Bent or broken Pins • Pushed back or expanded pins • Moisture in or on the connector • Missing or damaged connector seals • Dirt or debris in or on the connector pins • Connector shell broken • Wire insulation damage • Damaged connector locking tab.	**Connector Dirty or Damaged?** **Yes** **Repair** Clean, repair or replace the connector.	Repair Complete
	Connector Dirty or Damaged? **No**	5A

STEP 5: Check Vibration Lamp Wires		
STEP 5A: Check Supply Wire From Vibration Lamp to Diode Unit		
Condition: - Key switch OFF - Open access door on steering column. The diode unit is located on the door. Refer to the Operator's Station Relays and Diode procedure in the Compactor Repair section for diode unit location. - Disconnect the wiring harness from the diode unit. - Remove operator's station front cover. Refer to the Combination Meter procedure in the Compactor Repair Section. - Disconnect the Combination Meter 6-pin A wire harness connector from the combination meter. - Refer to the Wiring Diagram in this section for wire colors and connector pin location.		
Action	**Specifications / Repair**	**Next Step**
Check supply wire from vibration lamp to diode unit. • Insert one end of a jumper wire into the vibrator wire pin of the combination meter connector. • Connect the other end of the jumper to the chassis ground for the combination meter. • Place the multimeter positive test lead onto the vibration supply wire of the diode unit connector. • Place the multimeter negative test lead on chassis ground.	**Less than 10 ohms?** **Yes**	5B
	Less than 10 ohms? **No** Repair or replace the harness	Repair Complete

STEP 5B: Check Wire From Diode Unit to Low Side Input of Vibration Solenoid		
Condition: - Key switch OFF - Open access door on steering column. The diode unit is located on the door. Refer to the Operator's Station Relays and Diode procedure in the Compactor Repair section for diode unit location. - Disconnect the wiring harness from the diode unit. - Gain access to vibration solenoid valve terminal. Solenoid valve is located on top of pump unit. - Refer to the Wiring Diagram in this section for wire colors and connector pin location.		
Action	**Specifications / Repair**	**Next Step**
Check wire from diode unit to low side input of solenoid. • Connect one end of a jumper wire into the low side input to the vibration solenoid at the diode unit connector. • Connect the remaining jumper end to chassis ground. • Place a multimeter test lead onto the low side wire terminal on the solenoid valve. • Place the other multimeter test lead ground	**Less than 10 ohms?** **Yes**	5C
	Less than 10 ohms? **No** Repair or Replace the harness.	Repair Complete

STEP 5C: Check Wire From Diode Unit to High Side Input of Vibration Solenoid		
Condition: - Key switch OFF - Open access door on steering column. The diode unit is located on the door. Refer to the Operator's Station Relays and Diode procedure in the Compactor Repair section for diode unit location. - Disconnect the wiring harness from the diode unit. - Gain access to vibration solenoid valve terminal. Solenoid valve is located on top of pump unit. - Refer to the Wiring Diagram in this section for wire colors and connector pin location.		
Action	**Specifications / Repair**	**Next Step**
Check wire from diode unit to high side input of solenoid. • Connect one end of a jumper wire into the low side input to the vibration solenoid at the diode unit connector. • Connect the remaining jumper end to chassis ground. • Place a multimeter test lead onto the low side wire terminal on the solenoid valve. • Place the other multimeter test lead ground	**Less than 10 ohms?** **Yes**	6A
	Less than 10 ohms? **No** Replace the wire.	Repair Complete

STEP 6: Check Diode Unit		
STEP 6A: Check Compactor Low Amplitude Side of Diode		
Condition: - Key switch OFF - Open access door on steering column. The diode unit is located on the door. Refer to the Operator's Station Relays and Diode procedure in the Compactor Repair section for diode unit location. - Disconnect the wiring harness from the diode unit. - Refer to the Wiring Diagram in this section for wire colors and connector pin location.		
Action	**Specifications / Repair**	**Next Step**
Check wire from diode unit to low side input of solenoid. • Place one multimeter test lead on the pin in the diode the solenoid low side wire connects to. • Place the remaining multimeter test lead on the pin in the diode the vibration lamp supply wire connects to. • Record Reading • Switch the multimeter test lead positions. • Record reading.	**Is first reading greater than second?** **Yes**	6B
	Is first reading greater than second? **No** **Repair** Replace diode unit.	Repair Complete

STEP 6B: Check Compactor High Amplitude Side of Diode		
Condition: - Key switch OFF - Open access door on steering column. The diode unit is located on the door. Refer to the Operator's Station Relays and Diode procedure in the Compactor Repair section for diode unit location. - Disconnect the wiring harness from the diode unit. - Refer to the Wiring Diagram in this section for wire colors and connector pin location.		
Action	**Specifications / Repair**	**Next Step**
Check wire from diode unit to low side input of solenoid. • Place one multimeter test lead on the pin in the diode the solenoid high side wire connects to. • Place the remaining multimeter test lead on the pin in the diode the vibration lamp supply wire connects to. • Record Reading • Switch the multimeter test lead positions. • Record reading.	**Is first reading greater than second?** **Yes** **Repair** Contact Sakai America for authorization. Replace the Combination Meter; refer to the Combination Meter procedure in the Compactor Repair section.	Repair Complete
	Is first reading greater than second? **No** **Repair** Replace diode unit.	Repair Complete

Parking Brake Lamp Does Not Illuminate When Parking Brake Engaged

Symptoms
When the operator engages the parking brake the lamp on the combination meter does not illuminate.

How to Use This Troubleshooting Procedure
This symptom tree can be used to troubleshoot a Parking Brake Lamp Does Not Illuminate When Parking Brake Engaged problem. Start by performing Step 1 troubleshooting. Step 1 will ask a series of questions and will provide a list of troubleshooting steps to be performed depending on the symptom.

Shop Talk
The parking brake switch has two independent functions:

- Sends power to the parking brake solenoid to release hydraulic pressure on the brake system and set the parking brake.
- Allow the illumination of the parking brake lamp when the parking brake is set.

The parking brake lamp is located in the combination meter. The combination meter circuit has an independent chassis ground. The parking brake switch lamp contacts are normally closed. When the switch is in the released position (parking brake not set) lamp signal is shunted to chassis ground. When the parking brake switch is engaged (parking brake set) the contacts open allowing the lamp to illuminate.

Troubleshooting Summary

STEP 1: Check Parking Brake Lamp
- STEP 1A: Check Parking Brake Lamp

STEP 2: Check Harness Connectors
- STEP 2A: Check Connectors for Damage

STEP 3: Check Parking Brake Lamp Wire
- STEP 3A: Check Supply Wire From Parking Brake Switch to Parking Brake Lamp

STEP 4: Check Parking Brake Switch
- STEP 4A: Check Parking Brake Switch Contacts

STEP 1: Check Parking Bake Lamp		
STEP 1A: Check Parking Brake Lamp		
Condition: - Key switch OFF - Remove operator's station front cover. Refer to the Combination Meter procedure in the Compactor Repair Section.		
Action	**Specifications / Repair**	**Next Step**
Replace parking brake lamp with known good lamp. • Twist the parking brake lamp connector out of the combination meter. • Place a new or known good lamp in the connector and install into combination meter. • Set the parking brake.	**Did Parking Brake Lamp Illuminate?** **Yes** **Repair** Faulty vibration lamp.	Repair Complete
	Did Parking Brake Lamp Illuminate? **No**	2A

STEP 2: Check Harness Connectors		
STEP 2A: Check Connectors for Damage		
Condition: - Key switch OFF - Remove operator's station front cover. Refer to the Combination Meter procedure in the Compactor Repair Section. - Disconnect the Combination Meter 6-pin B wire harness connector from the combination meter.		
Action	**Specifications / Repair**	**Next Step**
Inspect the connectors for the following: • Loose connector • Corroded pins • Bent or broken Pins • Pushed back or expanded pins • Moisture in or on the connector • Missing or damaged connector seals • Dirt or debris in or on the connector pins • Connector shell broken • Wire insulation damage • Damaged connector locking tab.	**Connector Dirty or Damaged?** **Yes** **Repair** Clean, repair or replace the connector.	Repair Complete
	Connector Dirty or Damaged? **No**	3A

STEP 3: Check Parking Brake Lamp Wire		
STEP 3A: Check Parking Brake Supply Wire		
Condition: - Key switch OFF - Remove operator's station front cover. Refer to the Combination Meter procedure in the Compactor Repair Section. - Disconnect the parking brake lamp supply wire from the paring brake switch. - Disconnect the Combination Meter 6-pin B wire harness connector from the combination meter. - Refer to the Wiring Diagram in this section for wire colors and connector pin location.		
Action	**Specifications / Repair**	**Next Step**
Check parking brake supply wire. • Insert one end of a jumper wire into the parking brake lamp pin of the combination meter connector. • Connect the other end of the jumper to the chassis ground for the combination meter. • Place the multimeter positive test lead onto the parking brake lamp supply wire at the parking brake switch. • Place the multimeter negative test lead on chassis ground.	**Less than 10 ohms?** **Yes**	4A
	Less than 10 ohms? **No** Replace wire.	Repair Complete

STEP 4: Check Parking Brake Switch		
STEP 4A: Check Parking Brake Switch Contacts		
Condition: - Key switch OFF - Remove operator's station front cover. Refer to the Combination Meter procedure in the Compactor Repair Section. - Disconnect parking brake lamp chassis ground wire. - Disconnect parking brake lamp supply wire. - Refer to the Wiring Diagram in this section for wire colors and connector pin location.		
Action	**Specifications / Repair**	**Next Step**
Check parking brake switch contacts. • Place one multimeter test lead on the parking brake switch at the pin the parking brake ground wire was attached to. • Place the remaining multimeter test lead on the parking brake switch pin the parking brake lamp supply wire was attached to. • Push the parking brake button. • Record reading.	**Less than 10 ohms?** **Yes** **Repair** Replace the combination meter. Refer to Combination Meter Procedure in the Compactor Repair Procedure.	Repair Complete
	Less than 10 ohms? **No** **Repair** Replace the parking brake button. Refer to the Parking Brake procedure in the Compactor Repair Section.	Repair Complete

Engine Oil Pressure Lamp Illuminated

Symptoms
The engine oil pressure lamp is illuminated when the engine is running.

How to Use This Troubleshooting Procedure
This symptom tree can be used to troubleshoot an Engine Oil Pressure Lamp Illuminated problem. Start by performing Step 1 troubleshooting. Step 1 will ask a series of questions and will provide a list of troubleshooting steps to be performed depending on the symptom.

Shop Talk
The oil pressure lamp on the combination meter is illuminated when it receives a signal from the oil pressure relay. The oil pressure relay is a normally open contact relay that is de-energized. The relay is energized (contacts close) when it receives a signal from the ECM. When the contacts close the path for the engine oil pressure lamp is complete.

In the event of an engine low oil pressure condition, the ECM generates a fault code.

Troubleshooting Summary

STEP 1: Check for Active Fault Code(s)
- STEP 1A: Check for Active Fault Code(s)

STEP 2: Check ECM Connector
- STEP 2A: Check ECM Connector for Damage
- STEP 2B: Check for Short Circuit in ECM Connector

STEP 3: Check Relay
- STEP 3A: Check Relay Contacts

STEP 4: Check Combination Meter
- STEP 4A: Check Oil Pressure Warning Wire

STEP 1: Check for Active Fault Code(s)		
STEP 1A: Check for Active Fault Code(s)		
Condition: - Turn keyswitch to ON position - Open diagnostic switch access cover on steering column.		
Action	**Specifications / Repair**	**Next Step**
Verify active fault codes. • Place the diagnostic ON/OFF switch into the ON position. • Check engine warning lamp	**Engine warning or stop lamp flashing fault codes?** **Yes** **Repair** Contact the nearest Cummins® Authorized Repair Facility for engine faults.	Repair Complete
	Engine warning or stop lamp flashing fault codes? **No**	2A

STEP 2 Check ECM Connector		
STEP 2A: Check ECM Connector for Damage		
Condition: - Key switch OFF - Disconnect ECM 50-pin connector (compactor harness connector).		
Action	**Specifications / Repair**	**Next Step**
Inspect the 50-pin connector for the following: • Loose connector • Corroded pins • Bent or broken Pins • Pushed back or expanded pins • Moisture in or on the connector • Missing or damaged connector seals • Dirt or debris in or on the connector pins • Connector shell broken • Wire insulation damage • Damaged connector locking tab.	**Connector Dirty or Damaged?** **Yes** **Repair** Clean, repair or replace the connector.	Repair Complete
	Connector Dirty or Damaged? **No**	2B

STEP 2B: Check for Short Circuit in ECM Connector		
Condition: - Key switch OFF - Disconnect ECM 50-pin connector (compactor harness connector).		
Action	**Specifications / Repair**	**Next Step**
Check for Short Circuit in ECM connector. • Place one multimeter test lead into the SW. OUTPUT pin of the ECM 50-pin connector. • Place the remaining multimeter test lead into each of the remaining pins of the ECM 30-pin connector. • Record the resistance reading.	**Less than 10 ohms?** **Yes** **Repair** Repair or replace the compactor harness.	Repair Complete
	Less than 10 ohms? **No**	3A

STEP 3: Check Relay		
STEP 3A: Check Relay Contacts		
Condition: - Key switch OFF - Open access door on steering column. The engine oil pressure relay is located on the door. Refer to the Operator's Station Relays and Diode procedure in the Compactor Repair section for diode unit location. - Disconnect the oil pressure relay. - Refer to the Wiring Diagram in this section for wire colors and connector pin location.		
Action	**Specifications / Repair**	**Next Step**
Check relay contacts. • Connect a 12 VDC power supply positive lead to the pin 1 of the relay. • Connect the 12 VDC power supply return to pin 2. • Place one multimeter test lead onto pin 3. • Place the remaining multimeter test lead to pin 4.	**Less than 10 ohms?** **Yes** **Repair** Replace the relay. Refer to Operator's Station Relays and Diode procedure in the Compactor Repair Section.	Repair Complete
	Less than 10 ohms? **No**	4A

STEP 4: Check Combination Meter		
STEP 4A: Check Oil Pressure Warning Wire		
Condition: - Key switch OFF - Open access door on steering column. The engine oil pressure relay is located on the door. Refer to the Operator's Station Relays and Diode procedure in the Compactor Repair section for diode unit location. - Disconnect the oil pressure relay. - Remove operator's station front cover. Refer to the Combination Meter procedure in the Compactor Repair Section. - Disconnect the Combination Meter 6-pin B wire harness connector from the combination meter. - Refer to the Wiring Diagram in this section for wire colors and connector pin location.		
Action	**Specifications / Repair**	**Next Step**
Check parking brake switch contacts. • Insert one end of a jumper wire into the oil pressure warning pin of the combination meter connector. • Connect the other end of the jumper to the chassis ground for the combination meter. • Place the multimeter positive test lead onto the oil pressure warning pin in the relay connector. • Place the multimeter negative test lead on chassis ground.	**Less than 10 ohms?** **Yes** **Repair** Repair or replace the harness.	Repair Complete
	Less than 10 ohms? **No** **Repair** Replace the combination meter. Refer to Combination Meter Procedure in the Compactor Repair Procedure.	Repair Complete

Hydraulic Oil Filter Lamp Illuminated

WARNING

To reduce the possibility of personal injury, make sure the hydraulic system does not have pressure on it prior to opening the circuit.

Symptoms

The hydraulic oil pressure lamp is illuminated when the engine is running. Possible reduced performance and heat with hydraulic system if oil level is low. Possible hydraulic pump performance issues.

How to Use This Troubleshooting Procedure

This symptom tree can be used to troubleshoot a Hydraulic Oil Filter Lamp Illuminated problem. Start by performing Step 1 troubleshooting. Step 1 will ask a series of questions and will provide a list of troubleshooting steps to be performed depending on the symptom.

Shop Talk

The hydraulic oil filter lamp is illuminated when a switch(s) is closed. There is a switch located on the filter head of each hydraulic oil filter. The switches are connected in parallel to the hydraulic oil filter lamp on the combination meter. When either switch closes the circuit is completed and the lamp illuminates.

Prior to beginning troubleshooting the hydraulic oil lamp illumination issue:

- Obtain maintenance records for the compactor.
- Verify all hydraulic systems dos not have any leaks in hoses or at connections.

Troubleshooting Summary

STEP 1: Check System Maintenance
- STEP 1A: Check Hydraulic Oil Level
- STEP 1B: Check Hours on Hydraulic Oil Filter

STEP 2: Check Hydraulic Systems Function
- STEP 2A: Check Vibration, Steering and Propulsion Systems Function

STEP 3: Check for Ground
- STEP 3A: Check Hydraulic Oil Lamp Supply Wire

STEP 4: Check Hydraulic Oil Switch
- STEP 4A: Check Hydraulic Oil Switch Contacts

STEP 1: Check System Maintenance		
STEP 1A: Check Hydraulic Oil Level		
Condition: - Keyswitch in OFF position. - Compactor on level ground.		
Action	**Specifications / Repair**	**Next Step**
Check the hydraulic oil level in the sight glass on the hydraulic tank. Refer to Maintenance at Every Procedure at Every 50 Hours in the Periodic Maintenance Section.	**Hydraulic Oil Level Correct?** **Yes** .	1B
	Hydraulic Oil Level Correct? **No** **Repair** Add hydraulic oil to the hydraulic tank. Start engine, inspect for hydraulic oil leaks and hydraulic lamp illumination. If lamp is illuminated, repeat troubleshooting tree beginning at Step 1B.	Repair Complete

STEP 1B: Check Hours on Hydraulic Oil Filter		
Condition: - Key switch OFF - Compactor on level ground. - Obtain compactor maintenance records.		
Action	**Specifications / Repair**	**Next Step**
Check hours on hydraulic oil filter. • Record hours from hour meter located in the combination meter. • Subtract hours since last filter change from hours on hour meter.	**Greater than 500 hours?** **Yes** **Repair** Replace the hydraulic oil filters. Refer to the Maintenance Procedures at Every 500 Hours in the Periodic Maintenance Section. Start engine, inspect for hydraulic oil leaks and hydraulic lamp illumination. If lamp is illuminated, repeat troubleshooting tree beginning at Step 2A.	Repair Complete
	Greater than 500 hours? **No**	2A

STEP 2: Check Hydraulic Systems Function		
STEP 2A: Check Vibration, Steering and Propulsion Systems Function		
Condition: - Engine Started. - Set up compactor for operation. Refer to the Operating the Compactor procedure in the Operating Systems and Operating the Compactor section.		
Action	**Specifications / Repair**	**Next Step**
Check vibration, steering and propulsion systems function: • Check operation of vibration system. • Check operation of steering system. • Check operation of propulsion system.	**Hydraulic systems work properly?** **Yes**	3A
	Hydraulic systems work properly? **No** **Repair** Repair the hydraulic system that did not function properly. Refer to the appropriate troubleshooting tree: • Compactor Steering Malfunction • Compactor Roller Does Not Drive • Compactor Drive Wheels Do Not Drive • Vibration Does Not Work.	Repair Complete

STEP 3: Check for Ground		
STEP 3A: Check Hydraulic Oil Lamp Supply Wire		
Condition: - Key switch OFF - Disconnect the hydraulic oil filter warning wires from each of the hydraulic oil filters. - Remove operator's station front cover. Refer to the Combination Meter procedure in the Compactor Repair Section. - Disconnect the Combination Meter 6-pin B wire harness connector from the combination meter. - Refer to the Wiring Diagram in this section for wire colors and connector pin location.		
Action	**Specifications / Repair**	**Next Step**
Check hydraulic oil lamp supply wire: • Place one multimeter test lead onto one of the hydraulic oil filter warning wires. • Place the remaining multimeter test lead on chassis ground.	**Greater than 100K ohms?** **Yes**	4A
	Greater than 100K ohms? **No** **Repair** Repair or replace the harness.	Repair Complete

STEP 4: Check Hydraulic Oil Switch		
STEP 4A: Check Hydraulic Oil Switch Contacts		
Condition: - Key switch OFF - Disconnect the hydraulic oil filter warning wires from each of the hydraulic oil filters. - Refer to the Wiring Diagram in this section for wire colors and connector pin location.		
Action	**Specifications / Repair**	**Next Step**
Check oil hydraulic oil switch contacts: • Place one multimeter test lead on the hydraulic oil switch post. • Place the remaining multimeter test lead onto chassis ground. • Record the reading. • Repeat the process for the remaining hydraulic oil switch.	**Greater than 100K ohms?** **Yes** **Repair** Replace the combination meter. Refer to Combination Meter Procedure in the Compactor Repair Procedure.	Repair Complete
	Greater than 100K ohms? **No** **Repair** Replace the defective hydraulic oil pressure switch.	Repair Complete

Tachometer Does Not Indicate Engine Speed

Symptoms
The engine is running and the tachometer does not indicate engine speed correctly.

How to Use This Troubleshooting Procedure
This symptom tree can be used to troubleshoot a Tachometer Does Not Indicate Engine Speed problem. Start by performing Step 1 troubleshooting. Step 1 will ask a series of questions and will provide a list of troubleshooting steps to be performed depending on the symptom.

Shop Talk
The tachometer circuit consists of the following components:

- Tachometer – Receives signal from control box and indicates engine speed.
- Control Box – Receives signal from engine speed sensor and sends processed signal to tachometer.
- Engine Speed Sensor – Magnetic sensor that creates a signal when flywheel teeth pass the sensor.

As the flywheel rotates a signal is sent to the control box. The control box processes the signal from the speed sensor and sends it to the tachometer. The control box is chassis grounded and receives power from the fuse box.

Troubleshooting Summary

STEP 1: Check Dash Lamps
- STEP 1A: Check Engine Warning, Engine Stop and Wait to Start Lamps

STEP 2: Check Speed Sensor (Combination Meter Tachometer)
- STEP 2A: Check Speed Sensor (Combination Meter Tachometer) Adjustment
- STEP 2B: Check for Damage to Speed Sensor (Combination Meter Tachometer)

STEP 3: Check Power Circuit
- STEP 3A: Check Fuse Box Fuse
- STEP 3B: Check Wire From Fuse Box to Control Box
- STEP 3C: Check Control Box Chassis Ground
- STEP 3D: Check Fuse Box to Alternator Wire
- STEP 3E: Check Alternator to Battery Relay Wire
- STEP 3F: Check 75 Amp Fuse

STEP 4: Check Engine Speed Sensor (Combination Meter Tachometer) Sensor Wiring
- STEP 4A: Check Speed Sensor (Combination Meter Tachometer) Pick-up Wires

STEP 5:Check Tachometer and Control Box
- STEP 5A: Check Tachometer Signal Wire

STEP 1: Check Dash Lamps		
STEP 1A: Check Engine Warning, Engine Stop and Wait to Start Lamps		
Condition: - Key switch ON		
Action	**Specifications / Repair**	**Next Step**
Check the following lamps for illumination: • Engine Warning • Engine Stop • Wait to Start.	**Lamps Illuminate?** **Yes** .	2A
	Lamps Illuminate **No**	3A

STEP 2: Check Speed Sensor (Combination Meter Tachometer)		
STEP 2A: Check Speed Sensor (Combination Meter Tachometer) Adjustment		
Condition: - Key switch OFF - Disconnect the speed sensor (combination meter tachometer). Refer to the Speed Sensor (Combination Meter Tachometer) procedure in the Compactor Repair section.		
Action	**Specifications / Repair**	**Next Step**
Complete the Install step for the sensor. Refer to the Speed Sensor (Combination Meter Tachometer) procedure in the Compactor Repair section.	**Sensor out of adjustment?** **Yes** **Repair** Adjust the sensor. Refer to the Speed Sensor (Combination Meter Tachometer) procedure in the Compactor Repair section.	Repair Complete
	Sensor out of adjustment? **No**	2B

STEP 2B: Check for Damage to Speed Sensor (Combination Meter Tachometer)		
Condition: - Key switch OFF - Remove the speed sensor (combination meter tachometer). Refer to the Speed Sensor (Combination Meter Tachometer) procedure in the Compactor Repair section.		
Action	**Specifications / Repair**	**Next Step**
Inspect the engine speed sensor for: • Debris • Cracked or chipped potting, extruded potting • Damage from contact with the flywheel • If there is debris on the engine speed sensor, clean the sensor. 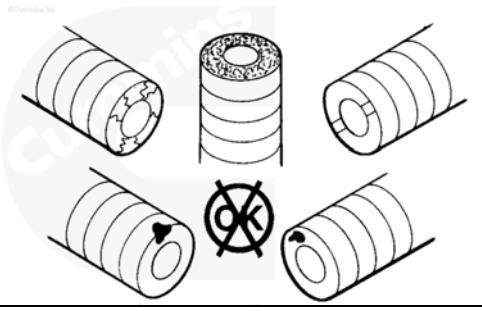	**Sensor Damaged?** **Yes** **Repair** Replace the sensor. Refer to the Speed Sensor (Combination Meter Tachometer) procedure in the Compactor Repair section.	Repair Complete
	Sensor Damaged? **No**	4A

STEP 3 Check Power Circuit		
STEP 3A: Check Fuse Box Fuse		
Condition: - Key switch OFF - Open access door on steering column. The fuse box is located on the door. Refer to the Operator's Station Relays and Diode procedure in the Compactor Repair section for fuses box location. - Remove fuse box fuse (F7). - Refer to the Wiring Diagram in this section for wire colors and connector pin location.		
Action	**Specifications / Repair**	**Next Step**
Check fuse box fuse (F7): • Place a multimeter test lead on one leg of the fuse. • Place the remaining multimeter test lead on the other leg of the fuse.	**Less than 10 ohms?** **Yes** .	3B
	Less than 10 ohms? **No** **Repair** Replace the fuse.	Repair Complete

STEP 3B: Check Wire From Fuse Box to Control Box		
Condition: - Key switch OFF - Open access door on steering column. The fuse box is located on the door. Refer to the Operator's Station Relays and Diode procedure in the Compactor Repair section for fuses block location. - Remove fuse box fuse (F7). - Disconnect the control box 6-pin connector. Refer to the Operator's Station Relays and Diode procedure in the Compactor Repair section. - Refer to the Wiring Diagram in this section for wire colors and connector pin location		
Action	**Specifications / Repair**	**Next Step**
Check wire from fuse box to control box: • Place a jumper in the charge wire pin of the control box 6-pin connector. • Connect the remaining end of the jumper to ground. • Place a multimeter test lead onto the supply side (terminal supplying control box) of the fuse box. • Place the remaining multimeter test lead onto chassis ground.	**Less than 10 ohms?** **Yes**	3C
	Less than 10 ohms? **No** **Repair** Repair or replace the compactor harness.	Repair Complete

STEP 3C: Check Control Box Chassis Ground		
Condition: - Key switch OFF - Disconnect the control box 6-pin connector. Refer to the Operator's Station Relays and Diode procedure in the Compactor Repair section. - Refer to the Wiring Diagram in this section for wire colors and connector pin location		
Action	**Specifications / Repair**	**Next Step**
Check control box chassis ground: • Place a multimeter test lead onto the ground wire terminal of the control box 6-pin connector. • Place the remaining multimeter test lead onto chassis ground.	**Less than 10 ohms?** **Yes**	3D
	Less than 10 ohms? **No** **Repair** Repair or replace the compactor harness.	Repair Complete

STEP 3D: Check Fuse Box to Alternator Wire		
Condition: - Key switch OFF - Disconnect the wire on the fuse box that connects to the alternator BAT connection. - Disconnect the wire on the alternator that connects to the fuse box. - Refer to the Wiring Diagram in this section for wire colors and connector pin location.		
Action	**Specifications / Repair**	**Next Step**
Check the fuse box to alternator wire: • Place one end of a jumper wire onto the wire that was removed from the alternator. • Place the other end of the jumper to ground. • Place a multimeter test lead onto the fuse box terminal that connects the alternator BAT wire. • Place the remaining multimeter test lead onto chassis ground.	**Less than 10 ohms?** **Yes**	3E
	Less than 10 ohms? **No** **Repair** Repair or replace the compactor harness.	Repair Complete

STEP 3E: Check the Alternator to Battery Relay Wire		
Condition: - Key switch OFF - Disconnect the wire on the alternator that connects to the battery relay. - Disconnect the wire on the battery relay that connects to the alternator. - Refer to the Wiring Diagram in this section for wire colors and connector pin location.		
Action	**Specifications / Repair**	**Next Step**
Check the alternator to battery relay wire. • Place one end of a jumper wire onto the wire that was removed from the alternator. • Place the other end of the jumper to ground. • Place a multimeter test lead onto the battery relay wire that connects to the alternator. • Place the remaining multimeter test lead onto chassis ground.	**Less than 10 ohms?** **Yes**	4A
	Less than 10 ohms? **No**	3F

STEP 3F: Check 75 Amp Fuse		
Condition: - Key switch OFF - Remove the 75 amp fuse. Refer to the Fuses 65 Amp and Above Procedure in the Compactor Repair section. - Refer to the Wiring Diagram in this section for wire colors and connector pin location.		
Action	**Specifications / Repair**	**Next Step**
Check the 75 amp fuse: • Place a multimeter test lead on one leg of the fuse. • Place the remaining multimeter test lead on the other leg of the fuse.	**Less than 10 ohms?** **Yes** .	4A
	Less than 10 ohms? **No** **Repair** Replace the faulty fuse. Refer to the Fuses 65 Amp and Above procedure in the Compactor Repair Section	Repair Complete

STEP 4: Check Speed Sensor (Combination Meter Tachometer) Sensor Wiring		
STEP 4A: Check Speed Sensor (Combination Meter Tachometer) Pick-up Wires		
Condition: - Key switch OFF - Disconnect the speed sensor (combination meter tachometer). Refer to the Speed Sensor (Combination Meter Tachometer) procedure in the Compactor Repair section. - Disconnect the control box 6-pin connector. Refer to the Operator's Station Relays and Diode procedure in the Compactor Repair section. - Refer to the Wiring Diagram in this section for wire colors and connector pin location.		
Action	**Specifications / Repair**	**Next Step**
Check relay contacts: • Place one end of a jumper to one of the tachometer pickup pins in the control box 6-pin connector. • Connect the other end of the jumper to chassis ground. • Place a multimeter test lead on of the tachometer pickup pins of the combination meter 8-pin connector. • Place the remaining multimeter test lead on the pin the on chassis ground. • Record the reading. • Repeat the process for the remaining tachometer pickup wire.	**Less than 10 ohms?** **Yes**	5A
	Less than 10 ohms? **No** **Repair** Repair or replace the compactor harness.	Repair Complete

STEP 5: Check Tachometer and Control Box		
STEP 5A: Check Tachometer Signal Wire		
Condition: - Key switch OFF - Disconnect the control box 6-pin connector. Refer to the Operator's Station Relays and Diode procedure in the Compactor Repair section. - Remove operator's station front cover. Refer to the Combination Meter procedure in the Compactor Repair Section. - Disconnect the Combination 8-pin connector. - Refer to the Wiring Diagram in this section for wire colors and connector pin location.		
Action	**Specifications / Repair**	**Next Step**
Check parking brake switch contacts: • Insert one end of a jumper wire into the tachometer pin of the control box 6-pin connector. • Connect the other end of the jumper to the chassis ground for the combination meter. • Place a multimeter test lead into the tachometer pin of combination meter 8-pin connector. • Place the multimeter negative test lead on chassis ground.	**Less than 10 ohms?** **Yes** **Repair** Replace the control box. Refer to the Tachometer Control Box procedure in the Compactor Repair section.	Repair Complete
	Less than 10 ohms? **No** **Repair** Repair or replace the harness.	Repair Complete

Hour Meter Does Not Work

Symptoms
The engine is running and the hour meter does not advance.

How to Use This Troubleshooting Procedure
This symptom tree can be used to troubleshoot an Hour Meter Does Not Work problem. Start by performing Step 1 troubleshooting. Step 1 will ask a series of questions and will provide a list of troubleshooting steps to be performed depending on the symptom.

Shop Talk
The hour meter is activated when the engine start circuit is activated by the keyswitch. The hour meter uses a 12 VDC supply that is connected to the charge wire in the combination meter 8-pin connector.

Troubleshooting Summary

STEP 1: Check Dash Lamps
- STEP 1A: Check Engine Warning, Engine Stop and Wait to Start Lamps

STEP 2A: Check Power Circuit
- STEP 2A: Check Fuse Box Fuse
- STEP 2B: Check Wire From Fuse Box to Combination Meter
- STEP 2C: Check Fuse Box to Alternator Wire
- STEP 2D: Check Alternator to Battery Relay Wire
- STEP 2E: Check 75 Amp Fuse

STEP 3: Check Hour Meter Wire
- STEP 3A: Check Hour Meter to Charge Wire

STEP 1: Check Dash Lamps		
STEP 1A: Check Engine Warning, Engine Stop and Wait to Start Lamps		
Condition: - Key switch ON		
Action	**Specifications / Repair**	**Next Step**
Check the following lamps for illumination: • Engine Warning • Engine Stop • Wait to Start.	**Lamps Illuminate?** **Yes** .	3A
	Lamps Illuminate **No**	2A

STEP 2 Check Power Circuit		
STEP 2A: Check Fuse Box Fuse		
Condition: - Key switch OFF - Open access door on steering column. The fuse box is located on the door. Refer to the Operator's Station Relays and Diode procedure in the Compactor Repair section for fuses box location. - Remove fuse box fuse (F7). - Refer to the Wiring Diagram in this section for wire colors and connector pin location.		
Action	**Specifications / Repair**	**Next Step**
Check fuse box fuse (F7): • Place a multimeter test lead on one leg of the fuse. • Place the remaining multimeter test lead on the other leg of the fuse.	**Less than 10 ohms?** **Yes** .	2B
	Less than 10 ohms? **No** **Repair** Replace the fuse.	Repair Complete

STEP 2B: Check Wire From Fuse Box to Combination Meter		
Condition: - Key switch OFF - Open access door on steering column. The fuse box is located on the door. Refer to the Operator's Station Relays and Diode procedure in the Compactor Repair section for fuses block location. - Remove fuse box fuse (F7). - Disconnect the combination Meter 8-pin connector. Refer to the Combination Meter procedure in the Compactor Repair section. - Refer to the Wiring Diagram in this section for wire colors and connector pin location.		
Action	**Specifications / Repair**	**Next Step**
Check wire from fuse box to control box: • Place a jumper in the charge wire pin of the combination meter 8-pin connector. • Connect the remaining end of the jumper to ground. • Place a multimeter test lead onto the supply side fuse box charge wire. • Place the remaining multimeter test lead onto chassis ground.	**Less than 10 ohms?** **Yes**	2C
	Less than 10 ohms? **No** **Repair** Repair or replace the compactor harness.	Repair Complete

STEP 2C: Check Fuse Box to Alternator Wire		
Condition: - Key switch OFF - Disconnect the battery. Refer to the Engine Start Switch Procedure in the Compactor Repair section. - Disconnect the wire on the fuse box that connects to the alternator BAT connection. - Disconnect the wire on the alternator that connects to the fuse box. - Refer to the Wiring Diagram in this section for wire colors and connector pin location.		
Action	**Specifications / Repair**	**Next Step**
Check the fuse box to alternator wire: • Place one end of a jumper wire onto the wire that was removed from the alternator. • Place the other end of the jumper to ground. • Place a multimeter test lead onto the fuse box terminal that connects the alternator BAT wire. • Place the remaining multimeter test lead onto chassis ground.	**Less than 10 ohms?** **Yes**	2D
	Less than 10 ohms? **No** **Repair** Repair or replace the compactor harness.	Repair Complete

STEP 2D: Check the Alternator to Battery Relay Wire		
Condition: - Key switch OFF - Disconnect the battery. Refer to the Engine Start Switch Procedure in the Compactor Repair section. - Disconnect the wire on the alternator that connects to the battery relay. - Disconnect the wire on the battery relay that connects to the alternator. - Refer to the Wiring Diagram in this section for wire colors and connector pin location.		
Action	**Specifications / Repair**	**Next Step**
Check the alternator to battery relay wire: • Place one end of a jumper wire onto the wire that was removed from the alternator. • Place the other end of the jumper to ground. • Place a multimeter test lead onto the battery relay wire that connects to the alternator. • Place the remaining multimeter test lead onto chassis ground.	**Less than 10 ohms?** **Yes**	2E
	Less than 10 ohms? **No** **Repair** Repair or replace the compactor harness.	Repair Complete

STEP 2E: Check 75 Amp Fuse		
Condition: - Key switch OFF - Remove the 75 amp fuse. Refer to the Fuses 65 Amp and Above Procedure in the Compactor Repair section. - Refer to the Wiring Diagram in this section for wire colors and connector pin location.		
Action	**Specifications / Repair**	**Next Step**
Check the 75 amp fuse: • Place a multimeter test lead on one leg of the fuse. • Place the remaining multimeter test lead on the other leg of the fuse.	**Less than 10 ohms?** **Yes** **Repair** Replace the fuse.	Repair Complete
	Less than 10 ohms? **No**	3A

STEP 3: Check Hour Meter Wire		
STEP 3A: Check Hour Meter to Charge Wire		
Condition: - Key switch OFF - Disconnect the combination Meter 8-pin connector. Refer to the Combination Meter procedure in the Compactor Repair section. - Refer to the Wiring Diagram in this section for wire colors and connector pin location.		
Action	**Specifications / Repair**	**Next Step**
Check relay contacts: • Place a multimeter test lead on tehof the charge pin of the combination meter 8-pin connector. • Place the remaining multimeter test lead on the hour meter pin of the combination meter 8-pin connector.	**Less than 10 ohms?** **Yes** **Repair** Replace the combination meter. Refer to the Combination Meter Procedure in the Compactor Repair Section.	Repair Complete
	Less than 10 ohms? **No** **Repair** Repair connector or replace the compactor harness.	Repair Complete

Coolant Temperature Gauge Does Not Work

WARNING

Do not remove the pressure cap from a hot engine. Wait until the coolant temperature is below 50ºC [120ºf] before removing the pressure cap. Heated coolant spray can cause personal injury.

Symptoms

The coolant temperature gauge does not indicate engine cooling system temperature or indicates the incorrect temperature.

How to Use This Troubleshooting Procedure

This symptom tree can be used to troubleshoot a Coolant Temperature Gauge Does Not Work problem. Start by performing Step 1 troubleshooting. Step 1 will ask a series of questions and will provide a list of troubleshooting steps to be performed depending on the symptom.

Shop Talk

The compactor has two coolant monitoring systems:

- Cummins® Engine – The engine is equipped with a coolant temperature sensor that is separate from the combination meter temperature sensor. The coolant temperature data is routed to the engine ECM. When the coolant temperature exceeds a set point a fault code is generated.
- Combination Meter Temperature Gauge – The combination meter is supplied coolant temperature data from a temperature sensor that is separate from the engine sensor. This sensor only sends data to the temperature gauge in the combination meter.

If coolant temperature fault codes are generated by the engine ECM and the coolant temperature reading on the combination meter temperature gauge indicates normal operation contact aa Authorized Cummins® Repair Facility.

Troubleshooting Summary

STEP 1: Check Coolant Temperature Sensor Systems
- STEP 1A: Check Coolant Temperature Gauge on Combination Meter
- STEP 1B: Check for Engine Fault Code

STEP 2: Check Coolant Temperature Sensor Wires
- STEP 2A: Check Temp. Meter Wire
- STEP 2B: Make Sure Coolant Temperature Sensor is Chassis

STEP 3: Coolant System Temperature Validation
- STEP 3A: Check Coolant Temperature Gauge on Combination Meter

STEP 1: Check Coolant Temperature Sensor Systems		
STEP 1A: Check Coolant Temperature Gauge on Combination Meter		
Condition: - Engine running. - Cooling system at operating temperature.		
Action	**Specifications / Repair**	**Next Step**
Check temperature reading on the combination meter temperature gauge.	**Does temperature gauge indicate?** **Yes** .	1B
	Does temperature gauge indicate? **No**	2A

STEP 1B: Check for Engine Fault Code		
Condition: - Engine running. - Cooling system at operating temperature.		
Action	**Specifications / Repair**	**Next Step**
Check lamps for illumination: • Engine Warning Lamp • Engine Stop Lamp.	**Lamp(s) illuminated?** **Yes** **Repair** Contact the nearest Cummins® Authorized Repair Facility for engine faults.	Repair Complete
	Lamp(s) illuminated? **No**	2A

STEP 2: Check Coolant Temperature Sensor Wires		
STEP 2A: Check Temp. Meter Wire		
Condition: - Key switch OFF - Disconnect combination meter 8-pin connector. Refer to the Combination Meter procedure in the Compactor Repair Section. - Disconnect coolant temperature sensor. Refer to the Coolant Temperature Sensor (Combination Temperature Gauge) procedure in the Compactor Repair section.		
Action	**Specifications / Repair**	**Next Step**
Check Temp. Meter wire: • Connect one end of a jumper to the temp meter pin of the combination meter 8-pin connector. • Connect the remaining end to chassis ground. • Place a multimeter test lead on the temp meter pin in the temperature sensor connector. • Place the remaining multimeter test lead on chassis ground.	**Less than 10 ohms?** **Yes**	2B
	Less than 10 ohms? **No** **Repair** Repair the damaged connector or replace the harness.	Repair Complete

STEP 2B: Make Sure Coolant Temperature Sensor is Chassis Grounded		
Condition: - Key switch OFF - Disconnect coolant temperature sensor. Refer to the Coolant Temperature Sensor (Combination Meter Temperature Gauge) procedure in the Compactor Repair section.		
Action	**Specifications / Repair**	**Next Step**
Check coolant sensor ground wire: • Place a multimeter test lead on the nut of the coolant temperature sensor. • Place the remaining multimeter test lead on chassis ground.	**Less than 10 ohms?** **Yes** **Repair** Replace the temperature sensor for the combination meter temperature gauge. Refer to the Coolant Temperature Sensor (Combination Meter Temperature Gauge) procedure in the Compactor Repair section.	3A
	Less than 10 ohms? **No** **Repair** Repair the damaged connector or replace the harness.	Repair Complete

STEP 3: Coolant Temperature System Validation		
STEP 3A: Check Coolant Temperature Gauge on the Combination Meter		
Condition: - Engine running. - Cooling system at operating temperature.		
Action	**Specifications / Repair**	**Next Step**
Check combination meter temperature gauge temperature indication.	**Temperature Gauge Indicating?** **Yes**	Repair Complete
	Temperature Gauge Indicating? **No** **Repair** Replace the combination meter. Refer to the Combination Meter procedure in the Compactor Repair section.	Repair Complete

Fuel Gauge Does Not Work

WARNING

Diesel fuel can be flammable. To reduce the possibility of fire resulting in severe personal injury, death or property damage, never smoke or allow sparks or flames (such as pilot lights, electrical switches or welding equipment) in the work area when inspecting or performing service or repairs on the fuel system.

Symptoms

The fuel gauge on the combination meter does not indicate tank level correctly or does not indicate at all.

How to Use This Troubleshooting Procedure

This symptom tree can be used to troubleshoot a Fuel Gauge Does Not Work problem. Start by performing Step 1 troubleshooting. Step 1 will ask a series of questions and will provide a list of troubleshooting steps to be performed depending on the symptom.

Shop Talk

The fuel gauge is located in the combination meter. A sending unit sends a signal to the combination meter fuel gauge. The sending unit is located on top of the fuel tank and is of electromechanical design.

The sending unit has a float switch design that is common to construction equipment and automotive design. Some common mechanical issues can be:

- Rust or corrosion to moving parts from tank condensation at low fuel levels.
- Float saturation causing the float to signal low fuel level in tank.

Troubleshooting Summary

STEP 1: Combination Meter Fuel Gauge Indication
- STEP 1A: Check Combination Meter Fuel Gauge Indication

STEP 2: Check Combination Meter Fuel Gauge Wires
- STEP 2A: Check Fuel Meter Wire
- STEP 2B: Check Fuel Meter Sending Unit Ground Wire

STEP 3: Verify Combination Meter Fuel Level Gauge Operation
- STEP 3A: Check Combination Meter Fuel Level Gauge Reading

STEP 1: Combination Meter Fuel Gauge Indication		
STEP 1A: Check Combination Meter Fuel Gauge Indication		
Condition: - Engine running. - Fuel tank level at ½ tank minimum.		
Action	**Specifications / Repair**	**Next Step**
Check the reading on the combination meter fuel level gauge.	**Does fuel level gauge indicate?** **Yes** .	3A
	Does fuel level gauge indicate? **No**	2A

STEP 2: Check Combination Meter Fuel Gauge Wires		
STEP 2A: Check the Fuel Meter Wire		
Condition: - Key switch OFF - Disconnect combination meter 8-pin connector. Refer to the Combination Meter procedure in the Compactor Repair Section. - Disconnect the fuel meter wire from the sending unit. Refer to the Sending Unit (Combination Meter Fuel Level Gauge) procedure in the Compactor Repair section.		
Action	**Specifications / Repair**	**Next Step**
Check fuel meter wire: • Connect one end of a jumper to the fuel meter pin of the combination meter 8-pin connector. • Connect the remaining end to chassis ground. • Place a multimeter test lead on the fuel meter pin in harness connector for the sending unit. • Place the remaining multimeter test lead on chassis ground.	**Less than 10 ohms?** **Yes**	2B
	Less than 10 ohms? **No** **Repair** Repair the damaged connector or replace the harness.	Repair Complete

STEP 2B: Check Fuel Meter Sending Unit Ground Wire		
Condition: - Key switch OFF - Disconnect ground wire connector from the sending unit. Refer to the Sending Unit (Combination Meter Fuel Level Gauge) procedure in the Compactor Repair section.		
Action	**Specifications / Repair**	**Next Step**
Check sending unit ground wire: • Place a multimeter test lead on the ground pin of the harness connector. • Place the remaining multimeter test lead on chassis ground.	**Less than 10 ohms?** **Yes** **Repair** Replace the sending unit. Refer to the Sending Unit (Combination Meter Fuel Level Gauge) procedure in the Compactor Repair Section.	3A
	Less than 10 ohms? **No** **Repair** Repair the damaged connector or replace the harness.	Repair Complete

STEP 3: Verify Combination Meter Fuel Level Gauge Operation		
STEP 3A: Check Combination Meter Fuel Level Gauge Reading		
Condition: - Engine running. - Fuel tank level ½ minimum.		
Action	**Specifications / Repair**	**Next Step**
Check combination meter fuel gauge reading.	**Fuel Gauge Indicating?** **Yes**	Repair Complete
	Fuel Gauge Indicating? **No** **Repair** Replace the combination meter. Refer to the Combination Meter procedure in the Compactor Repair section.	Repair Complete

Backup Alarm Does Not Work

Symptoms
When the directional control lever is moved in the reverse direction the back up alarm does not sound.

How to Use This Troubleshooting Procedure
This symptom tree can be used to troubleshoot a Back Up Alarm Does Not Work problem. Start by performing Step 1 troubleshooting. Step 1 will ask a series of questions and will provide a list of troubleshooting steps to be performed depending on the symptom.

Shop Talk
The back up alarm system consists of the following components:

- Backup buzzer switch
- Backup buzzer

The backup buzzer switch is mounted against a cam lobe on the directional control lever. The backup buzzer switch is connected as a normally open switch. When the directional control lever is moved in the reverse direction the backup buzzer switch closes and completes the backup alarm circuit.

Troubleshooting Summary

STEP 1: Check Backup Buzzer Switch
- STEP 1A: Check Backup Buzzer Switch Adjustment
- STEP 1B: Check Backup Buzzer Switch Contacts
- STEP 1C: Check Backup Buzzer Switch to Backup Buzzer Wire

STEP 2: Check Power Circuit
- STEP 2A: Check Fuse Box Fuse
- STEP 2B: Check Wire From Fuse Box to Backup Buzzer Switch
- STEP 2C: Check Fuse Box to Alternator Wire
- STEP 2D: Check Alternator to Battery Relay Wire
- STEP 2E: Check 75 Amp Fuse

STEP 3: Check Backup Buzzer
- STEP 3A: Check Backup Buzzer Ground Wire

STEP 1: Check Backup Buzzer Switch		
STEP 1A: Check Backup Buzzer Switch Adjustment		
Condition: - Key switch OFF - Remove directional control lever panel. Refer to the Backup Buzzer Switch and Interlock Switch procedure in the Compactor Repair section.		
Action	**Specifications / Repair**	**Next Step**
Check backup buzzer switch adjustment: • Make sure the backup buzzer switch is mounted securely. • Move directional control lever in the reverse direction. • Make sure the plunger depresses completely when on the cam lobe.	**Switch adjusted correctly?** **Yes** .	1B
	Switch adjusted correctly? **No** **Repair** Adjust the switch so the plunger is depressed completely when directional control lever is in reverse position. Refer to the Backup Buzzer and Interlock Switch procedure in the Compactor Repair section.	Repair Complete

STEP 1B: Check Backup Buzzer Switch Contacts		
Condition: - Key switch OFF - Disconnect the backup buzzer switch. Refer to the Backup Buzzer Switch and Interlock Switch procedure in the Compactor Repair section.		
Action	**Specifications / Repair**	**Next Step**
Check backup buzzer switch contacts: • Place a multimeter test lead on the backup buzzer supply terminal (COM) on the backup buzzer switch. • Place the remaining multimeter test lead on the backup buzzer supply (NO) terminal on the backup buzzer switch. • Move the directional control lever to the reverse position.	**Less than 10 ohms?** **Yes**	1C
	Less than 10 ohms? **No** **Repair** Replace the backup buzzer switch. Refer to the Backup Buzzer Switch and Interlock Switch Procedure in the Compactor Repair section.	Repair Complete

STEP 1C: Check Backup Buzzer Switch to Backup Buzzer Wire		
Condition: - Key switch OFF - Disconnect the backup buzzer switch. Refer to the Backup Buzzer Switch and Interlock Switch procedure in the Compactor Repair section. - Disconnect the supply wire to the backup buzzer.		
Action	**Specifications / Repair**	**Next Step**
Check the backup buzzer switch to backup buzzer wire: • Connect one end of a jumper to the backup buzzer supply wire at the backup buzzer. • Connect the other end of the jumper to chassis ground. • Place a multimeter test lead onto the backup buzzer supply wire at the backup buzzer switch. • Place the remaining multimeter test lead on chassis ground.	**Less than 10 ohms?** **Yes**	2A
	Less than 10 ohms? **No** Repair or replace the harness.	Repair Complete

STEP 2 Check Power Circuit		
STEP 2A: Check Fuse Box Fuse		
Condition: - Key switch OFF - Open access door on steering column. The fuse box is located on the door. Refer to the Operator's Station Relays and Diode procedure in the Compactor Repair section for fuses box location. - Remove fuse box fuse (F9). - Refer to the Wiring Diagram in this section for wire colors and connector pin location.		
Action	**Specifications / Repair**	**Next Step**
Check fuse box fuse (F9): • Place a multimeter test lead on one leg of the fuse. • Place the remaining multimeter test lead on the other leg of the fuse.	**Less than 10 ohms?** **Yes** .	2B
	Less than 10 ohms? **No** **Repair** Replace the fuse.	Repair Complete

STEP 2B: Check Wire From Fuse Box to Battery Backup Buzzer Switch		
Condition: - Key switch OFF - Open access door on steering column. The fuse box is located on the door. Refer to the Operator's Station Relays and Diode procedure in the Compactor Repair section for fuses box location. - Remove fuse box fuse (F9). - Disconnect the backup buzzer switch. Refer to the Backup Buzzer Switch and Interlock Switch procedure in the Compactor Repair section - Refer to the Wiring Diagram in this section for wire colors and connector pin location		
Action	**Specifications / Repair**	**Next Step**
Check wire from fuse box to backup buzzer switch: • Connect one end of a jumper onto the supply wire harness connector at the backup buzzer switch. • Connect the remaining end of the jumper to ground. • Place a multimeter test lead on the fuse box terminal that supplies the backup buzzer switch. • Place the remaining multimeter test lead onto chassis ground.	**Less than 10 ohms?** **Yes**	2C
	Less than 10 ohms? **No** **Repair** Repair or replace the compactor harness.	Repair Complete

STEP 2C: Check Fuse Box to Alternator Wire		
Condition: - Key switch OFF - Disconnect the battery. Refer to the Engine Start Switch Procedure in the Compactor Repair section. - Disconnect the wire on the fuse box that connects to the alternator BAT connection. - Disconnect the wire on the alternator that connects to the fuse box. - Refer to the Wiring Diagram in this section for wire colors and connector pin location.		
Action	**Specifications / Repair**	**Next Step**
Check the fuse box to alternator wire: • Place one end of a jumper wire onto the wire that was removed from the alternator. • Place the other end of the jumper to ground. • Place a multimeter test lead onto the fuse box terminal that connects the alternator BAT wire. • Place the remaining multimeter test lead onto chassis ground.	**Less than 10 ohms?** **Yes**	2D
	Less than 10 ohms? **No** **Repair** Repair or replace the compactor harness.	Repair Complete

STEP 2D: Check the Alternator to Battery Relay Wire		
Condition: - Key switch OFF - Disconnect the battery. Refer to the Engine Start Switch Procedure in the Compactor Repair section. - Disconnect the wire on the alternator that connects to the battery relay. - Disconnect the wire on the battery relay that connects to the alternator. - Refer to the Wiring Diagram in this section for wire colors and connector pin location.		
Action	**Specifications / Repair**	**Next Step**
Check the alternator to battery relay wire: • Place one end of a jumper wire onto the wire that was removed from the alternator. • Place the other end of the jumper to ground. • Place a multimeter test lead onto the battery relay wire that connects to the alternator. • Place the remaining multimeter test lead onto chassis ground.	**Less than 10 ohms?** **Yes**	2E
	Less than 10 ohms? **No** **Repair** Repair or replace the compactor harness.	Repair Complete

STEP 2E: Check 75 Amp Fuse		
Condition: - Key switch OFF - Remove the 75 amp fuse. Refer to the Fuses 65 Amp and Above Procedure in the Compactor Repair section. - Refer to the Wiring Diagram in this section for wire colors and connector pin location.		
Action	**Specifications / Repair**	**Next Step**
Check the 75 amp fuse: • Place a multimeter test lead on one leg of the fuse. • Place the remaining multimeter test lead on the other leg of the fuse.	**Less than 10 ohms?** **Yes** **Repair** Replace the fuse.	Repair Complete
	Less than 10 ohms? **No**	3A

STEP 3: Check Backup Buzzer		
STEP 3A: Check Backup Buzzer Ground Wire		
Condition: - Key switch OFF - Disconnect backup buzzer ground wire.		
Action	**Specifications / Repair**	**Next Step**
Check backup buzzer ground wire: • Place a multimeter test lead onto the ground wire at the backup buzzer. • Place the remaining multimeter test lead onto chassis ground. .	**Less than 10 ohms?** **Yes** **Repair** Replace the backup buzzer.	Repair Complete
	Less than 10 ohms? **No** **Repair** Repair or replace the compactor harness.	Repair Complete

Horn Does Not Work

Symptoms
The compactor horn does not sound when the button on the steering wheel is pushed.

How to Use This Troubleshooting Procedure
This symptom tree can be used to troubleshoot a Horn Does Not Work problem. Start by performing Step 1 troubleshooting. Step 1 will ask a series of questions and will provide a list of troubleshooting steps to be performed depending on the symptom.

Shop Talk
The horn circuit consists of the following components:

- Horn switch (located on steering wheel)
- Horn
- Horn relay (located on steering column access door).

The horn relay circuit works on the low side driver concept (completing a return path for the circuit). The horn relay has an individual 12 VDC supply for the open side of the contact and for the coil.

The horn button covers the steering wheel mounting nut. On the inside of the button a contact is installed. When the button is pushed down the contact completes the path through chassis ground.

When the operator pushes the horn button, the horn relay coil is energized. Relay contacts close allowing 12 VDC to be supplied to the horn.

Troubleshooting Summary

STEP 1: Check the Horn Switch
- STEP 1A: Check Horn Switch Contacts
- STEP 1B: Check Horn Assembly
- STEP 1C: Check Horn Switch Output Wire
- STEP 1D: Check Horn Switch Ground

STEP 2: Check Power Circuit
- STEP 2A: Check Fuse Box Fuse
- STEP 2B: Check Wire From Fuse Box to Horn Relay Coil
- STEP 2C: Check Wire From Fuse Box to Horn Relay Contact
- STEP 2D: Check Fuse Box to Alternator Wire
- STEP 2E: Check Alternator to Battery Relay Wire
- STEP 2F: Check 75 Amp Fuse

STEP 3: Check Horn Relay
- STEP 3A: Test Horn Relay

STEP 4:Check Horn
- STEP 4A: Check Horn Ground Wire

STEP 1: Check Horn Switch		
STEP 1A: Check Horn Switch Contacts		
Condition: - Key switch OFF - Disconnect the horn relay. Refer to the Operator's Station Relays and Diode procedure in the Compactor Repair section. - Depress horn button.		
Action	**Specifications / Repair**	**Next Step**
Check the horn switch contacts: • Place a multimeter test lead onto the supply wire to the horn relay in the harness connector. • Place the remaining multimeter test lead on chassis ground. • Push horn button.	**Less than 10 ohms?** **Yes**	2A
	Less than 10 ohms? **No**	1B

STEP 1B: Check Horn Assembly		
Condition: - Key switch OFF - Remove the horn switch button from the steering wheel.		
Action	**Specifications / Repair**	**Next Step**
Inspect contact in button for excessive wear or damage to contact preventing from touching ground when button is depressed.	**Button contact operational and adjusted correctly?** **Yes**	1C
	Button contact operational and adjusted correctly? **No** **Repair** Adjust or replace the horn button contacts. Test horn. If test fails repeat troubleshooting tree.	Repair Complete

STEP 1C: Check Horn Switch Output Wire		
Condition: - Key switch OFF - Disconnect the horn relay. Refer to the Operator's Station Relays and Diode procedure in the Compactor Repair section. - Remove the horn switch button from the steering wheel. - Disconnect the horn switch supply from the steering wheel.		
Action	**Specifications / Repair**	**Next Step**
Check horn switch output wire: • Connect one end of a jumper wire to the supply wire at the steering wheel. • Connect the other end of the jumper to chassis ground. • Place a multimeter test lead onto the horn switch supply pin of the horn relay connector. • Place the remaining multimeter test lead onto chassis ground.	**Less than 10 ohms?** **Yes**	2A
	Less than 10 ohms? **No**	Repair Complete

STEP 2 Check Power Circuit		
STEP 2A: Check Fuse Box Fuse		
Condition: - Key switch OFF - Open access door on steering column. The fuse box is located on the door. Refer to the Operator's Station Relays and Diode procedure in the Compactor Repair section for fuse box location. - Remove fuse box fuse (F8). - Refer to the Wiring Diagram in this section for wire colors and connector pin location.		
Action	**Specifications / Repair**	**Next Step**
Check fuse box fuse (F8): • Place a multimeter test lead on one leg of the fuse. • Place the remaining multimeter test lead on the other leg of the fuse.	**Less than 10 ohms?** **Yes**	2B
	Less than 10 ohms? **No** **Repair** Replace the fuse.	Repair Complete

STEP 2B: Check Wire From Fuse Box to Horn Relay Coil		
Condition: - Key switch OFF - Open access door on steering column. The fuse box is located on the door. Refer to the Operator's Station Relays and Diode procedure in the Compactor Repair section for fuse block location. - Remove fuse box fuse (F8). - Disconnect the horn relay. Refer to the Operator's Station Relays and Diode procedure in the Compactor Repair section. - Refer to the Wiring Diagram in this section for wire colors and connector pin location		
Action	**Specifications / Repair**	**Next Step**
Check wire from fuse box to horn relay coil: • Connect one end of a jumper wire to the horn relay coil supply wire of the of the horn relay harness connector. • Connect the remaining end of the jumper to ground. • Place a multimeter test lead onto the horn relay supply side of the fuse box (F8). • Place the remaining multimeter test lead onto chassis ground.	**Less than 10 ohms?** **Yes**	2C
	Less than 10 ohms? **No** **Repair** Repair or replace the compactor harness.	Repair Complete

STEP 2C: Check Wire From Fuse Box to Horn Relay Contact		
Condition: - Key switch OFF - Open access door on steering column. The fuse box is located on the door. Refer to the Operator's Station Relays and Diode procedure in the Compactor Repair section for fuse block location. - Remove fuse box fuse (F8). - Remove the horn relay. - Refer to the Wiring Diagram in this section for wire colors and connector pin location.		
Action	**Specifications / Repair**	**Next Step**
Check wire from fuse box to horn relay coil: • Connect one end of a jumper wire to the horn relay contact supply wire of the of the horn relay harness connector. • Connect the remaining end of the jumper to ground. • Place a multimeter test lead onto the horn relay supply side of the fuse box (F8). • Place the remaining multimeter test lead onto chassis ground.	**Less than 10 ohms?** **Yes**	2D
	Less than 10 ohms? **No** **Repair** Repair or replace the compactor harness.	Repair Complete

STEP 2D: Check Fuse Box to Alternator Wire		
Condition: - Key switch OFF - Disconnect the battery. Refer to the Engine Start Switch Procedure in the Compactor Repair section. - Disconnect the wire on the fuse box that connects to the alternator BAT connection. - Disconnect the wire on the alternator that connects to the fuse box. - Refer to the Wiring Diagram in this section for wire colors and connector pin location.		
Action	**Specifications / Repair**	**Next Step**
Check the fuse box to alternator wire: • Place one end of a jumper wire onto the wire that was removed from the alternator. • Place the other end of the jumper to ground. • Place a multimeter test lead onto the fuse box terminal that connects the alternator BAT wire. • Place the remaining multimeter test lead onto chassis ground.	**Less than 10 ohms?** **Yes**	2E
	Less than 10 ohms? **No** **Repair** Repair or replace the compactor harness.	Repair Complete

STEP 2E: Check the Alternator to Battery Relay Wire		
Condition: - Key switch OFF - Disconnect the battery. Refer to the Engine Start Switch Procedure in the Compactor Repair section. - Disconnect the wire on the alternator that connects to the battery relay. - Disconnect the wire on the battery relay that connects to the alternator. - Refer to the Wiring Diagram in this section for wire colors and connector pin location.		
Action	**Specifications / Repair**	**Next Step**
Check the alternator to battery relay wire: • Place one end of a jumper wire onto the wire that was removed from the alternator. • Place the other end of the jumper to ground. • Place a multimeter test lead onto the battery relay wire that connects to the alternator. • Place the remaining multimeter test lead onto chassis ground.	**Less than 10 ohms?** **Yes**	2F
	Less than 10 ohms? **No** **Repair** Repair or replace the compactor harness.	Repair Complete

STEP 2F: Check 75 Amp Fuse		
Condition: - Key switch OFF - Remove the 75 amp fuse. Refer to the Fuses 65 Amp and Above Procedure in the Compactor Repair section. - Refer to the Wiring Diagram in this section for wire colors and connector pin location.		
Action	**Specifications / Repair**	**Next Step**
Check the 75 amp fuse: • Place a multimeter test lead on one leg of the fuse. • Place the remaining multimeter test lead on the other leg of the fuse.	**Less than 10 ohms?** **Yes** **Repair** Replace the fuse.	Repair Complete
	Less than 10 ohms? **No**	3A

STEP 3: Check Horn Relay		
STEP 3A: Test Horn Relay		
Condition: - Keyswitch ON - Open access door on steering column and disconnect the horn relay. Refer to the Operator's Station Relays and Diode procedure in the Compactor Repair section.		
Action	**Specifications / Repair**	**Next Step**
Test the horn relay: • Disconnect the horn. • Connect the positive multimeter test lead to the horn supply wire in the harness connector. • Connect the negative multimeter test lead to chassis ground. • Push the horn button. • Record the voltage.	**12 VDC?** **Yes**	4A
	12 VDC? **No** **Repair** Replace the horn relay. Refer to the Operator's Station Relays and Diode procedure in the Compactor Repair section.	Repair Complete

STEP 4: Check Horn		
STEP 4A: Check Horn Ground Wire		
Condition: - Key switch OFF - Disconnect horn. - Refer to the Wiring Diagram in this section for wire colors and connector pin location.		
Action	**Specifications / Repair**	**Next Step**
Check horn ground wire: • Place a multimeter test lead into the horn ground wire of the harness connector. • Place the multimeter negative test lead on chassis ground.	**Less than 10 ohms?** **Yes** **Repair** Replace the horn.	Repair Complete
	Less than 10 ohms? **No** **Repair** Repair or replace the harness.	Repair Complete

Compactor Steering Malfunction

Symptoms
The compactor does not steer correctly or does not have steering.

How to Use This Troubleshooting Procedure
This symptom tree can be used to troubleshoot a Compactor Steering Malfunction problem. Start by performing Step 1 troubleshooting. Step 1 will ask a series of questions and will provide a list of troubleshooting steps to be performed depending on the symptom.

Shop Talk
The steering system is comprised of the following components:

- Steering pump
- Orbitrol steering valve
- Steering cylinders.

Hydraulic oil from the steering pump enters the Orbitrol steering valve. The Orbitrol supplies to the right and left steering cylinder determined by the steering wheel direction and speed of movement.

Troubleshooting Summary

STEP 1: Check Compactor
- STEP 1A: Check Hydraulic Oil Level
- STEP 1B: Check for Hydraulic Leaks

STEP 2: Check Steering Pump
- STEP 2A: Check Steering Pump Pressure
- STEP 2B: Adjust Steering Pump Pressure

STEP 3: Check Steering Cylinders
- STEP 3A: Inspect Steering Cylinders and Center Pin for Damage

STEP 1: Check Compactor		
STEP 1A: Check Hydraulic Oil Level		
Condition: - Key switch OFF		
Action	**Specifications / Repair**	**Next Step**
Check hydraulic oil level at the hydraulic tank sight glass.	**Hydraulic Oil Level Low?** **Yes** **Repair** Fill the hydraulic tank to proper level. .	1B
	Hydraulic Oil Level Low? **No**	2A

STEP 1B: Check for Hydraulic Leaks		
Condition: - Start engine		
Action	**Specifications / Repair**	**Next Step**
Check for hydraulic leaks: • Check all propulsion hoses • Check roller drive motor • Check rear end.	**Hydraulic leaks?** **Yes** Repair hydraulic leak.	Repair Complete
	Hydraulic leaks? **No**	2A

STEP 2: Check Steering Pump		
STEP 2A: Check Steering Pump Pressure		
Condition: - Engine running in FULL. - Parking brake set.		
Action	**Specifications / Repair**	**Next Step**
Check steering pump pressure. Refer to Measure Steering Circuit Pressure procedure in the Testing and Adjustment section.	**Steering circuit pressure correct?** **Yes**	3A
	Steering circuit pressure correct? **No**	2B

STEP 2B: Adjust Steering Pump Pressure		
Condition: - Engine running in FULL. - Parking brake set.		
Action	**Specifications / Repair**	**Next Step**
Adjust propulsion pump pressure. Refer to Adjust Steering Circuit procedure in the Testing and Adjustment section.	**Steering pump adjusts correctly?** **Yes**	Repair Complete
	Steering pump adjusts correctly? **No** **Repair** Replace the propulsion pump. Refer to the Engine and Pump Assembly procedure in the Compactor Repair Section.	2B

STEP 3: Check Steering Cylinders		
STEP 3A: Inspect Steering Cylinders and Center Pin for Damage		
Condition: - Keyswitch OFF. - Parking brake set.		
Action	**Specifications / Repair**	**Next Step**
Inspect steering cylinders and center pin for damage that would prevent proper operation.	**Steering cylinder damaged?** **Yes** **Repair** Replace the steering cylinders.	Repair Complete
	Steering cylinder damaged? **No** **Repair** Replace the Orbitrol steering valve.	Repair Complete

Vibration Does Not Work

Symptoms
The compactor vibration does not work in low or high amplitude from the continuous or momentary switch.

How to Use This Troubleshooting Procedure
This symptom tree can be used to troubleshoot a Vibration Does Not Work problem. Start by performing Step 1 troubleshooting. Step 1 will ask a series of questions and will provide a list of troubleshooting steps to be performed depending on the symptom.

Shop Talk
The compactor vibration system is an electrically activated, hydraulic motor driven system. The following switches are used in the vibration system:

- Throttle switch – When in the FULL position allows input voltage to be routed to the vibration switch and forward/reverse lever switch.
- Forward/Reverse lever switch – When vibration switched to the forward/reverse lever icon the switch allows activation of the vibration system from the forward/reverse lever. Push button once to activate, push button a second time to deactivate.
- Vibrator Amplitude Switch – Selects from high to low vibration amplitude.

When the engine is started and FULL speed is selected on the engine speed switch 12 VDC is routed to the vibration switch. If the switch is in the CONT position 12 VDC is routed to the vibration amplitude switch. Depending on the setting of the vibration amplitude switch, the 12 VDC signal will be routed to the high side or low side of the solenoid.

When the solenoid receives signal it switches to the high or low side position. The shift in the solenoid valve routes the input hydraulic pressure to the second port, which will change the direction of the hydraulic motor.

The vibrator shaft has a throw that moves when the direction changes. When in the high amplitude mode the throw moves to one area and when the low amplitude is selected the throw moves to a set point, which allows the shaft to deliver less vibration with the same speed.

The engine speed select switch must be in the FULL position to enable vibration.

Troubleshooting Summary

STEP 1: Check Compactor
- STEP1A: Check Compactor for Vibratory Operation Set Up
- STEP 1B: Check Hydraulic Oil Level
- STEP 1C: Check for Hydraulic Leaks

STEP 2: Check Engine Speed Change Switch
- STEP 2A: Check Engine Speed Change Switch to Fuse Box F8 Wire
- STEP 2B: Check Engine Speed Switch Contacts 4 and 5
- STEP 2C:Check Wire From Fuse Box to Engine Speed Change Switch
- STEP 2D: Check Fuse Box to Alternator Wire
- STEP 2E: Check Alternator to Battery Relay Wire
- STEP 2F: Check 75 Amp Fuse

STEP 3: Check Vibration Switch
- STEP 3A: Check Wire From Engine Speed Change Switch to Vibration Switch
- STEP 3B: Check Wire From Vibration Switch to Vibration Amplitude Switch LOW
- STEP 3C: Check Wire From Vibration Switch to Vibration Amplitude Switch HIGH
- STEP 3D: Check Vibration Switch Contacts

STEP 4: Check Vibration Amplitude Switch
- STEP 4A: Check Wire From Vibration Amplitude Switch LOW to Solenoid LOW
- STEP 4B: Check Wire From Vibration Amplitude Switch HIGH to Solenoid HIGH
- STEP 4C: Check Vibration Amplitude Switch Contacts 4 and 5
- STEP 3B: Check Vibration Amplitude Switch Contacts 1 and 2

STEP 5: Check Vibratory Pump
- STEP 5A: Check Vibratory Pump Pressure
- STEP 5B: Adjust Vibratory Pump Pressure

STEP 6: Check Vibratory Shaft
- STEP 6A: Check Hydraulic Motor to Vibratory Shaft Splines and Eccentric Shaft Rotation
- STEP 6B: Check for Motor Operation

STEP 1: Check Compactor		
STEP 1A: Check Compactor Vibratory Operation Set Up		
Condition: - Engine running.		
Action	**Specifications / Repair**	**Next Step**
Check compactor for vibratory operation set up. Refer to the Vibratory Operation procedure in the Compactor Operation section.	**Compactor set up correctly?** **Yes** .	1B
	Compactor set up correctly? **No** **Repair** Align all switches to operate compactor in vibratory mode. Refer to the Vibratory Operation procedure in the Compactor Operation section.	Repair Complete

STEP 1B: Check Hydraulic Oil Level		
Condition: - Key switch OFF		
Action	**Specifications / Repair**	**Next Step**
Check hydraulic oil level at the hydraulic tank sight glass.	**Hydraulic Oil Level Low?** **Yes** **Repair** Fill the hydraulic tank to proper level. .	1C
	Hydraulic Oil Level Low? **No**	2A

STEP 1C: Check for Hydraulic Leaks		
Condition: - Start engine.		
Action	**Specifications / Repair**	**Next Step**
Check for hydraulic leaks: • Check all propulsion hoses • Check roller drive motor • Check rear end.	**Hydraulic leaks?** **Yes** Repair hydraulic leak.	Repair Complete
	Hydraulic leaks? **No**	2A

STEP 2: Check Engine Speed Change Switch		
STEP 2A: Check Engine Speed Change Switch to Fuse Box F8 Wire		
Condition: - Key switch to OFF position. - Remove fuse F8. Refer to the Relays and Diode procedure in the Compactor Repair Procedure. - Disconnect the engine speed switch to fuse box F8 wire at the engine speed change switch. Refer to the Engine Speed Change Switch procedure in the Compactor Repair section. - Disconnect the engine speed change wire at the fuse box F8 connection.		
Action	**Specifications / Repair**	**Next Step**
Check the engine speed change switch to fuse box F8 wire: • Connect one end of a jumper on wire that routes to the fuse box F8 fuse at the engine speed change switch. • Connect the other end of the jumper to ground. • Place a multimeter test lead on the fuse box at the F8 to engine speed switch terminal. • Place the remaining multimeter test lead on ground. .	**Less than 10 ohms?** **Yes**	2B
	Less than 10 ohms? **No** **Repair** Repair or replace the wiring harness	Repair Complete

STEP 2B: Check Contacts 4 and 5		
Condition: - Key switch OFF. - Engine speed switch in the FULL position. - Disconnect the engine speed change switch to throttle relay wire at the engine speed change switch. Refer to the Engine Speed Change Switch Procedure in the Compactor Repair section. - Disconnect the engine speed change switch wire to fuse box F8 wire at the engine speed change switch. Refer to the Engine Speed Change Switch Procedure in the Compactor Repair section.		
Action	**Specifications / Repair**	**Next Step**
Check Contacts 4 and 5: • Place a multimeter test lead on terminal 4 of the engine speed change switch. • Place the remaining multimeter test lead on terminal 5 of the engine change switch.	**Less than 10 ohms?** **Yes** .	2C
	Less than 10 ohms? **No** **Repair** Replace the engine speed change switch. Refer to the Engine Speed Change Switch procedure in the Compactor Repair section	Repair Complete

STEP 2C: Check Engine Speed Change Switch to Fuse Box F8 Wire		
Condition: - Key switch OFF - Remove fuse F8 from the fuse box. Refer to the Operator's Station Relays and Diodes procedure in the Compactor Repair section. - Disconnect the engine speed change switch to fuse box F8 wire at the engine speed change switch. Refer to the Engine Speed Change Switch procedure in the Compactor Repair section.		
Action	**Specifications / Repair**	**Next Step**
Check engine speed change switch to fuse box F8 wire: • Connect a jumper wire to the fuse box F8 wire at the engine speed change switch. • Connect the remaining jumper end to ground. • Place a multimeter test lead to fuse box F8 terminal that connects to the engine speed change switch. • Place the remaining multimeter test lead on ground.	**Less than 10 ohms?** **Yes**	2D
	Less than 10 ohms? **No** **Repair** Repair or replace the wiring harness.	Repair Complete

STEP 2D: Check Fuse Box to Alternator Wire		
Condition: - Key switch OFF. - Disconnect the battery. Refer to the Engine Start Switch Procedure in the Compactor Repair section. - Disconnect the wire on the fuse box that connects to the alternator BAT connection. - Disconnect the wire on the alternator that connects to the fuse box. - Refer to the Wiring Diagram in this section for wire colors and connector pin location		
Action	**Specifications / Repair**	**Next Step**
Check the fuse box to alternator wire: • Place one end of a jumper wire onto the wire that was removed from the alternator. • Place the other end of the jumper to ground. • Place a multimeter test lead onto the fuse box terminal that connects the alternator BAT wire. • Place the remaining multimeter test lead onto chassis ground.	**Less than 10 ohms?** **Yes**	2E
	Less than 10 ohms? **No** **Repair** Repair or replace the compactor harness.	Repair Complete

STEP 2E: Check the Alternator to Battery Relay Wire		
Condition: - Key switch OFF. - Disconnect the battery. Refer to the Engine Start Switch Procedure in the Compactor Repair section. - Disconnect the wire on the alternator that connects to the battery relay. - Disconnect the wire on the battery relay that connects to the alternator. - Refer to the Wiring Diagram in this section for wire colors and connector pin location.		
Action	**Specifications / Repair**	**Next Step**
Check the alternator to battery relay wire: • Place one end of a jumper wire onto the wire that was removed from the alternator. • Place the other end of the jumper to ground. • Place a multimeter test lead onto the battery relay wire that connects to the alternator. • Place the remaining multimeter test lead onto chassis ground.	**Less than 10 ohms?** **Yes**	2F
	Less than 10 ohms? **No** **Repair** Repair or replace the compactor harness.	Repair Complete

STEP 2F: Check 75 Amp Fuse		
Condition: - Key switch OFF. - Remove the 75 Amp fuse. Refer to the Fuses 65 Amp and Above procedure in the Compactor Repair section. - Refer to the Wiring Diagram in this section for wire colors and connector pin location.		
Action	**Specifications / Repair**	**Next Step**
Check the 75 amp fuse: • Place a multimeter test lead on one leg of the fuse. • Place the remaining multimeter test lead on the other leg of the fuse.	**Less than 10 ohms?** **Yes** **Repair** Replace the fuse.	Repair Complete
	Less than 10 ohms? **No**	3A

STEP 3: Check Vibration Switch		
STEP 3A: Check Wire From Engine Speed Change Switch to Vibration Switch		
Condition: - Key switch to OFF position. - Remove wire to vibration switch from engine speed change switch. Refer to the Engine Speed Change Switch procedure in the Compactor Repair Section. - Remove wire to engine speed change switch from vibration switch. Refer to the Vibratory Control Panel Switches procedure in the Compactor Repair section.		
Action	**Specifications / Repair**	**Next Step**
Check wire from engine speed change switch to vibration switch: • Connect one end of a jumper on the wire that routes to the vibration switch at the engine speed change switch. • Connect the other end of the jumper to ground. • Place a multimeter test lead on the wire that routes to the vibration switch at the engine speed change switch. • Place the remaining multimeter test lead on ground. .	**Less than 10 ohms?** **Yes**	2B
	Less than 10 ohms? **No** **Repair** Repair or replace the wiring harness	Repair Complete

STEP 3B: Check Wire From Vibration Switch to Vibration Amplitude Switch LOW		
Condition: - Key switch to OFF position. - Remove vibration switch wire that routes to the vibration amplitude switch. Refer to the Vibratory Control Panel Switches procedure in the Compactor Repair section. - Remove vibration amplitude switch wire that routes to the vibration switch. Refer to the Vibratory Control Panel Switches procedure in the Compactor Repair section.		
Action	**Specifications / Repair**	**Next Step**
Check wire from vibration switch to vibration amplitude switch: • Connect one end of a jumper to the vibration switch wire that routes to the vibration amplitude switch LOW. • Connect the other end of the jumper to ground. • Place a multimeter test lead on the vibration amplitude switch LOW wire that routes to the vibration switch. • Place the remaining multimeter test lead on ground. .	**Less than 10 ohms?** **Yes**	3C
	Less than 10 ohms? **No** **Repair** Repair or replace the wiring harness	Repair Complete

STEP 3C: Check Wire From Vibration Switch to Vibration Amplitude Switch HIGH		
Condition: - Key switch to OFF position. - Remove vibration switch wire that routes to the vibration amplitude switch. Refer to the Vibratory Control Panel Switches procedure in the Compactor Repair section. - Remove vibration amplitude switch wire that routes to the vibration switch. Refer to the Vibratory Control Panel Switches procedure in the Compactor Repair section.		
Action	**Specifications / Repair**	**Next Step**
Check wire from vibration switch to vibration amplitude switch: • Connect one end of a jumper to the vibration switch wire that routes to the vibration amplitude switch HIGH. • Connect the other end of the jumper to ground. • Place a multimeter test lead on the vibration amplitude switch wire HIGH that routes to the vibration switch. • Place the remaining multimeter test lead on ground. .	**Less than 10 ohms?** **Yes**	3D
	Less than 10 ohms? **No** **Repair** Repair or replace the wiring harness	Repair Complete

STEP 3D: Check Vibration Switch Contacts		
Condition: - Key switch OFF. - Vibration switch to the CONT position. - Disconnect the wire that routes from the vibration amplitude switch to the solenoid LO. Refer to the Vibration Control Panel Switches procedure in the Compactor Repair section. - Disconnect the wire that routes from the vibration amplitude switch to the vibration switch. Refer to the Vibration Control Panel Switches procedure in the Compactor Repair section.		
Action	**Specifications / Repair**	**Next Step**
Check vibration switch contacts: • Place a multimeter test lead on terminal 2 of the vibration switch. • Place the remaining multimeter test lead on terminal 1 of the engine change switch.	**Less than 10 ohms?** **Yes** .	4A
	Less than 10 ohms? **No** **Repair** Replace the vibration switch. Refer to the Vibratory Control Panel Switches procedure in the Compactor Repair section.	Repair Complete

STEP 4: Check Vibration Amplitude Switch		
STEP 4A: Check Wire From Vibration Amplitude Switch LOW to Solenoid LOW		
Condition: - Key switch to OFF position. - Remove the vibration amplitude switch wire that routes to the solenoid low side. Refer to the Vibratory Control Panel Switches procedure is the Compactor Repair section. - Remove solenoid wire LO wire that connects to the vibration amplitude switch.		
Action	**Specifications / Repair**	**Next Step**
Check wire from vibration switch to vibration amplitude switch: • Connect one end of a jumper to the vibration amplitude switch wire that routes to the solenoid LOW. • Connect the other end of the jumper to ground. • Place a multimeter test lead on the solenoid wire LOW that routes to the vibration switch. • Place the remaining multimeter test lead on ground. .	**Less than 10 ohms?** **Yes**	4B
	Less than 10 ohms? **No** **Repair** Repair or replace the wiring harness.	Repair Complete

STEP 4B: Check Wire From Vibration Amplitude Switch HIGH to Solenoid HIGH		
Condition: - Key switch to OFF position. - Remove the vibration amplitude switch wire that routes to the solenoid low side. Refer to the Vibratory Control Panel Switches procedure is the Compactor Repair section. - Remove solenoid wire HIGH wire that connects to the vibration amplitude switch.		
Action	**Specifications / Repair**	**Next Step**
Check wire from vibration switch to vibration amplitude switch: • Connect one end of a jumper to the vibration amplitude switch wire HIGH that routes to the solenoid. • Connect the other end of the jumper to ground. • Place a multimeter test lead on the solenoid wire HIGH that routes to the vibration switch. • Place the remaining multimeter test lead on ground. .	**Less than 10 ohms?** **Yes**	4C
	Less than 10 ohms? **No** **Repair** Repair or replace the wiring harness.	Repair Complete

STEP 4C: Check Vibration Amplitude Switch Contacts 4 and 5		
Condition: - Key switch OFF. - Vibration amplitude switch to low amplitude icon setting. - Disconnect the wire that routes from the vibration amplitude switch to the solenoid LOW. Refer to the Vibration Control Panel Switches procedure in the Compactor Repair section. - Disconnect the wire that routes from the vibration amplitude switch to the vibration switch. Refer to the Vibration Control Panel Switches procedure in the Compactor Repair section.		
Action	**Specifications / Repair**	**Next Step**
Check vibration switch contacts: • Place a multimeter test lead on terminal 4 of the vibration switch. • Place the remaining multimeter test lead on terminal 5 of the vibration amplitude switch.	**Less than 10 ohms?** **Yes** .	4D
	Less than 10 ohms? **No** **Repair** Replace the vibration switch. Refer to the Vibratory Control Panel Switches procedure in the Compactor Repair section.	Repair Complete

STEP 4D: Check Vibration Amplitude Switch Contacts 1and 2		
Condition: - Key switch OFF. - Vibration amplitude switch to low amplitude icon setting. - Disconnect the wire that routes from the vibration amplitude switch to the solenoid HIGH. Refer to the Vibration Control Panel Switches procedure in the Compactor Repair section. - Disconnect the wire that routes from the vibration amplitude switch to the vibration switch. Refer to the Vibration Control Panel Switches procedure in the Compactor Repair section.		
Action	**Specifications / Repair**	**Next Step**
Check vibration switch contacts: • Place a multimeter test lead on terminal 1 of the vibration switch. • Place the remaining multimeter test lead on terminal 2 of the vibration amplitude switch.	**Less than 10 ohms?** **Yes** .	5A
	Less than 10 ohms? **No** **Repair** Replace the vibration switch. Refer to the Vibratory Control Panel Switches procedure in the Compactor Repair section.	Repair Complete

STEP 5: Check Vibratory Pump		
STEP 5A: Check Vibratory Pump Pressure		
Condition: - Engine running in FULL. - Parking brake set.		
Action	**Specifications / Repair**	**Next Step**
Check vibratory circuit pressure. Refer to Measure Vibratory Circuit Pressure procedure in the Testing and Adjustment section. .	**Vibratory pump pressure correct?** **Yes**	5B
	Vibratory pump pressure correct? **No** **Repair** Replace the vibratory pump. Refer to the Roller procedure in the Compactor Repair section.	Repair Complete

STEP 5B: Adjust Vibratory Pump Pressure		
Condition: - Engine running in FULL. - Parking brake set.		
Action	**Specifications / Repair**	**Next Step**
Adjust vibratory pump pressure. Refer to Adjust Vibratory Circuit Pressure procedure in the Testing and Adjustment section. .	**Propulsion pump adjusts correctly?** **Yes**	6A
	Propulsion pump adjusts correctly? **No** **Repair** Contact Sakai America for Authorization to replace the propulsion pump. Refer to the Engine and Pump Assembly procedure in the Compactor Repair Section.	Repair Complete

STEP 6: Check Shaft		
STEP 6A: Check Hydraulic Motor to Vibratory Shaft Splines and Eccentric Shaft Rotation		
Condition: - Engine start switch to OFF. - Remove the vibratory pump. Refer to the Roller procedure in the Compactor Repair section.		
Action	**Specifications / Repair**	**Next Step**
Check hydraulic motor to vibratory shaft splines and eccentric shaft rotation: • Check splines on vibratory shaft for damage. • Check splines in vibratory motor for damage. . .	**Splines damaged and shaft rotate?** **Yes** Replace the shaft and motor. Refer to the Roller procedure in the Compactor Repair section.	Repair Complete
	Splines damaged and shaft rotate? **No** **Repair** Disassemble the roller bearing for inspection. Refer to the Roller procedure in the Compactor Repair procedure.	6B

STEP 6B: Check Motor for Operation		
Condition: - Remove motor from roller. Refer to the Roller procedure in the Compactor Repair section. - Forward/Reverse lever in neutral. - Engine running in FULL. - Chocks installed under roller and drive wheels. - Parking brake set.		
Action	**Specifications / Repair**	**Next Step**
Turn vibratory system on and check motor for rotation.	**Motor rotates?** **Yes**	6A
	Motor rotates? **No** **Repair** Replace the vibration motor. Refer to the Roller procedure in the Compactor Repair section.	Repair Complete

Low Amplitude Vibration Setting Does Not Work

Symptoms
The compactor vibration does not work in low amplitude setting but works in the high amplitude setting.

How to Use This Troubleshooting Procedure
This symptom tree can be used to troubleshoot Low Amplitude Vibration Setting Does Not Work problem. Start by performing Step 1 troubleshooting. Step 1 will ask a series of questions and will provide a list of troubleshooting steps to be performed depending on the symptom.

Shop Talk
The compactor vibration system is an electrically activated, hydraulic motor driven system. The following switches are used in the vibration system:

- Throttle Switch – When in the FULL position allows input voltage to be routed to the vibration switch and forward/reverse lever switch.
- Vibration Switch – Allows selection of CONT vibration or allows forward/reverse lever switch to have control.
- Vibrator Amplitude Switch – Selects from high to low vibration amplitude.
- Forward/Reverse Lever Switch – When vibration switched to the forward/reverse lever icon the switch allows activation of the vibration system from the forward/reverse lever. Push button once to activate, push button a second time to deactivate.

When the engine is started and FULL speed is selected on the engine speed switch 12 VDC is routed to the vibration switch. If the switch is in the CONT position 12 VDC is routed to the vibration amplitude switch. Depending on the setting of the vibration amplitude switch, the 12 VDC signal will be routed to the high side or low side of the solenoid.

When the solenoid receives signal it switches to the high or low side position. The shift in the solenoid valve routes the input hydraulic pressure to the second port, which will change the direction of the hydraulic motor.

The vibrator shaft has a throw that moves when the direction changes. When in the high amplitude mode the throw moves to one area and when the low amplitude is selected the throw moves to a set point, which allows the shaft to deliver less vibration with the same speed.

The engine speed select switch must be in the FULL position to enable vibration.

Troubleshooting Summary

STEP 1: Check Compactor
- STEP1A: Check Compactor for Vibratory Operation Set Up

STEP 2: Check Vibration Switch
- STEP 2A: Check Wire From Engine Speed Change Switch to Vibration Switch
- STEP 2B: Check Wire From Vibration Switch to Vibration Amplitude Switch LOW
- STEP 2C: Check Vibration Switch Contacts

STEP 3: Check Vibration Amplitude Switch
- STEP 3A: Check Wire From Vibration Amplitude Switch LOW to Solenoid LOW
- STEP 3B: Check Vibration Amplitude Switch Contacts

STEP 4: Check Solenoid
- STEP 4A: Check Vibration Amplitude Solenoid Operation

STEP 1: Check Compactor		
STEP 1A: Check Compactor for Vibratory Operation Set Up		
Condition: - Engine running.		
Action	**Specifications / Repair**	**Next Step**
Check compactor for vibratory operation set up. Refer to the Vibratory Operation procedure in the Compactor Operation section.	**Compactor set up correctly?** **Yes** .	2A
	Compactor set up correctly? **No** **Repair** Align all switches to operate compactor in vibratory mode. Refer to the Vibratory Operation procedure in the Compactor Operation section.	Repair Complete

STEP 2: Check Vibration Switch		
STEP 2A: Check Wire From Engine Speed Change Switch to Vibration Switch		
Condition: - Key switch to OFF position. - Remove wire from vibration switch from engine speed change switch. Refer to the Engine Speed Change Switch procedure in the Compactor Repair Section. - Remove wire from engine speed change switch from vibration switch. Refer to the Vibratory Control Panel Switches procedure in the Compactor Repair section.		
Action	**Specifications / Repair**	**Next Step**
Check wire from engine speed change switch to vibration switch: • Connect one end of a jumper on the wire that routes to the vibration switch at the engine speed change switch. • Connect the other end of the jumper to ground. • Place a multimeter test lead on the wire that routes to the vibration switch at the engine speed change switch. • Place the remaining multimeter test lead on ground. .	**Less than 10 ohms?** **Yes**	2B
	Less than 10 ohms? **No** **Repair** Repair or replace the wiring harness.	Repair Complete

STEP 2B: Check Wire From Vibration Switch to Vibration Amplitude Switch LOW		
Condition: - Key switch to OFF position. - Remove vibration switch wire that routes to the vibration amplitude switch. Refer to the Vibratory Control Panel Switches procedure in the Compactor Repair section. - Remove vibration amplitude switch wire that routes to the vibration switch. Refer to the Vibratory Control Panel Switches procedure in the Compactor Repair section.		
Action	**Specifications / Repair**	**Next Step**
Check wire from vibration switch to vibration amplitude switch: • Connect one end of a jumper to the vibration switch wire that routes to the vibration amplitude switch LOW. • Connect the other end of the jumper to ground. • Place a multimeter test lead on the vibration amplitude switch LOW wire that routes to the vibration switch. • Place the remaining multimeter test lead on ground. .	**Less than 10 ohms?** **Yes**	2C
	Less than 10 ohms? **No** **Repair** Repair or replace the wiring harness.	Repair Complete

STEP 2C: Check Vibration Switch Contacts		
Condition: - Key switch OFF. - Vibration switch to the CONT position. - Disconnect the wire that routes from the vibration amplitude switch to the solenoid LOW. Refer to the Vibration Control Panel Switches procedure in the Compactor Repair section. - Disconnect the wire that routes from the vibration amplitude switch to the vibration switch. Refer to the Vibration Control Panel Switches procedure in the Compactor Repair section.		
Action	**Specifications / Repair**	**Next Step**
Check vibration switch contacts: • Place a multimeter test lead on terminal 2 of the vibration switch. • Place the remaining multimeter test lead on terminal 1 of the vibration switch.	**Less than 10 ohms?** **Yes** .	3A
	Less than 10 ohms? **No** **Repair** Replace the vibration switch. Refer to the Vibratory Control Panel Switches procedure in the Compactor Repair section.	Repair Complete

STEP 3: Check Vibration Amplitude Switch		
STEP 3A: Check Wire From Vibration Amplitude Switch LOW to Solenoid LOW		
Condition: - Key switch to OFF position. - Remove the vibration amplitude switch wire that routes to the solenoid low side. Refer to the Vibratory Control Panel Switches procedure in the Compactor Repair section. - Remove solenoid wire LOW wire that connects to the vibration amplitude switch.		
Action	**Specifications / Repair**	**Next Step**
Check wire from vibration switch to vibration amplitude switch: • Connect one end of a jumper to the vibration amplitude switch wire that routes to the solenoid LOW. • Connect the other end of the jumper to ground. • Place a multimeter test lead on the solenoid wire LOW that routes to the vibration switch. • Place the remaining multimeter test lead on ground. .	**Less than 10 ohms?** **Yes**	3B
	Less than 10 ohms? **No** **Repair** Repair or replace the wiring harness.	Repair Complete

STEP 3B: Check Vibration Amplitude Switch Contacts		
Condition: - Key switch OFF - Vibration amplitude switch to low amplitude icon setting. - Disconnect the wire that routes from the vibration amplitude switch to the solenoid LOW. Refer to the Vibration Control Panel Switches procedure in the Compactor Repair section. - Disconnect the wire that routes from the vibration amplitude switch to the vibration switch. Refer to the Vibration Control Panel Switches procedure in the Compactor Repair section. - Vibration amplitude switch set to minimum setting.		
Action	**Specifications / Repair**	**Next Step**
Check vibration switch contacts: • Place a multimeter test lead on terminal 4 of the vibration switch. • Place the remaining multimeter test lead on terminal 5 of the vibration amplitude switch.	**Less than 10 ohms?** **Yes** .	4A
	Less than 10 ohms? **No** **Repair** Replace the vibration switch. Refer to the Vibratory Control Panel Switches procedure in the Compactor Repair section.	Repair Complete

STEP 4: Check Vibration Amplitude Solenoid		
STEP 4A: Check Vibration Solenoid Operation		
Condition: - Key switch to OFF position. - Remove vibration amplitude solenoid. Refer to the Vibration Amplitude Solenoid procedure in the Compactor Repair section.		
Action	**Specifications / Repair**	**Next Step**
Check vibration solenoid operation: • Connect a ground wire to the solenoid. • Connect a 12 VDC power supply to the LOW side terminal of the terminal. • Connect the return wire of power supply to LOW side of solenoid. Solenoid will shift from low to high if working correctly.	**Solenoid shifted?** **Yes** **Repair** Replace the vibratory motor. Refer to the Roller procedure in the Compactor Repair section.	Repair Complete
	Solenoid Shifted? **No** **Repair** Replace the Solenoid. Refer to the Vibration Amplitude Solenoid procedure in the Compactor Repair section.	Repair Complete

High Amplitude Vibration Setting Does Not Work

Symptoms
The compactor vibration does not work in high amplitude setting but works in the low amplitude setting.

How to Use This Troubleshooting Procedure
This symptom tree can be used to troubleshoot a High Amplitude Vibration Setting Does Not Work problem. Start by performing Step 1 troubleshooting. Step 1 will ask a series of questions and will provide a list of troubleshooting steps to be performed depending on the symptom.

Shop Talk
The compactor vibration system is an electrically activated, hydraulic motor driven system. The following switches are used in the vibration system:

- Throttle switch – When in the FULL position allows input voltage to be routed to the vibration switch and forward/reverse lever switch.
- Vibration Switch – Allows selection of CONT vibration or allows forward/reverse lever switch to have control.
- Vibrator Amplitude Switch – Selects from high to low vibration amplitude.
- Forward/Reverse lever switch – When vibration switched to the forward/reverse lever icon the switch allows activation of the vibration system from the forward/reverse lever. Push button once to activate, push button a second time to deactivate.

When the engine is started and FULL speed is selected on the engine speed switch 12 VDC is routed to the vibration switch. If the switch is in the CONT position 12 VDC is routed to the vibration amplitude switch. Depending on the setting of the vibration amplitude switch, the 12 VDC signal will be routed to the high side or low side of the solenoid.

When the solenoid receives signal it switches to the high or low side position. The shift in the solenoid valve routes the input hydraulic pressure to the second port, which will change the direction of the hydraulic motor.

The vibrator shaft has a throw that moves when the direction changes. When in the high amplitude mode the throw moves to one area and when the low amplitude is selected the throw moves to a set point, which allows the shaft to deliver less vibration with the same speed.

The engine speed select switch must be in the FULL position to enable vibration.

Troubleshooting Summary

STEP 1: Check Compactor
- STEP 1A: Check Compactor for Vibratory Operation Set Up

STEP 2: Check Vibration Switch
- STEP 2A: Check Wire From Engine Speed Change Switch to Vibration Switch
- STEP 2B: Check Wire From Vibration Switch to Vibration Amplitude Switch HIGH
- STEP 2C: Check Vibration Switch Contacts

STEP 3: Check Vibration Amplitude Switch
- STEP 3A: Check Wire From Vibration Amplitude Switch HIGH to Solenoid HIGH
- STEP 3B: Check Vibration Amplitude Switch Contacts

STEP 4: Check Solenoid
- STEP 4A: Check Vibration Amplitude Solenoid Operation

STEP 1: Check Compactor		
STEP 1A: Check Compactor Vibratory Operation Set Up		
Condition: - Engine running.		
Action	**Specifications / Repair**	**Next Step**
Check compactor for vibratory operation set up. Refer to the Vibratory Operation procedure in the Compactor Operation section.	**Compactor set up correctly?** **Yes** .	2A
	Compactor set up correctly? **No** **Repair** Align all switches to operate compactor in vibratory mode. Refer to the Vibratory Operation procedure in the Compactor Operation section.	Repair Complete

STEP 2: Check Vibration Switch		
STEP 2A: Check Wire From Engine Speed Change Switch to Vibration Switch		
Condition: - Key switch to OFF position. - Remove wire to vibration switch from engine speed change switch. Refer to the Engine Speed Change Switch procedure in the Compactor Repair Section. - Remove wire to engine speed change switch from vibration switch. Refer to the Vibratory Control Panel Switches procedure in the Compactor Repair section.		
Action	**Specifications / Repair**	**Next Step**
Check wire from engine speed change switch to vibration switch: • Connect one end of a jumper on the wire that routes to the vibration switch at the engine speed change switch. • Connect the other end of the jumper to ground. • Place a multimeter test lead on the wire that routes to the vibration switch at the engine speed change switch. • Place the remaining multimeter test lead on ground. .	**Less than 10 ohms?** **Yes**	2B
	Less than 10 ohms? **No** **Repair** Repair or replace the wiring harness	Repair Complete

STEP 2B: Check Wire From Vibration Switch to Vibration Amplitude Switch HIGH		
Condition: - Key switch to OFF position. - Remove vibration switch wire that routes to the vibration amplitude switch. Refer to the Vibratory Control Panel Switches procedure in the Compactor Repair section. - Remove vibration amplitude switch wire that routes to the vibration switch. Refer to the Vibratory Control Panel Switches procedure in the Compactor Repair section.		
Action	**Specifications / Repair**	**Next Step**
Check wire from vibration switch to vibration amplitude switch: • Connect one end of a jumper to the vibration switch wire that routes to the vibration amplitude switch HIGH. • Connect the other end of the jumper to ground. • Place a multimeter test lead on the vibration amplitude switch wire HIGH that routes to the vibration switch. • Place the remaining multimeter test lead on ground. .	**Less than 10 ohms?** **Yes**	2C
	Less than 10 ohms? **No** **Repair** Repair or replace the wiring harness.	Repair Complete

STEP 2C: Check Vibration Switch Contacts		
Condition: - Key switch OFF. - Vibration switch to the CONT position. - Disconnect the wire that routes from the vibration amplitude switch to the solenoid HIGH. Refer to the Vibration Control Panel Switches procedure in the Compactor Repair section. - Disconnect the wire that routes from the vibration amplitude switch to the vibration switch. Refer to the Vibration Control Panel Switches procedure in the Compactor Repair section. - Vibration amplitude switch to the maximum setting.		
Action	**Specifications / Repair**	**Next Step**
Check vibration switch contacts: • Place a multimeter test lead on terminal 2 of the vibration switch. • Place the remaining multimeter test lead on terminal 1 of the engine change switch.	**Less than 10 ohms?** **Yes** .	3A
	Less than 10 ohms? **No** **Repair** Replace the vibration switch. Refer to the Vibratory Control Panel Switches procedure in the Compactor Repair section.	Repair Complete

STEP 3: Check Vibration Amplitude Switch		
STEP 3A: Check Wire From Vibration Amplitude Switch HIGH to Solenoid HIGH		
Condition: - Key switch to OFF position. - Remove the vibration amplitude switch wire that routes to the solenoid low side. Refer to the Vibratory Control Panel Switches procedure in the Compactor Repair section. - Remove solenoid wire HIGH wire that connects to the vibration amplitude switch.		
Action	**Specifications / Repair**	**Next Step**
Check wire from vibration switch to vibration amplitude switch: • Connect one end of a jumper to the vibration amplitude switch wire HIGH that routes to the solenoid • Connect the other end of the jumper to ground. • Place a multimeter test lead on the solenoid wire HIGH that routes to the vibration switch. • Place the remaining multimeter test lead on ground. .	**Less than 10 ohms?** **Yes**	3B
	Less than 10 ohms? **No** **Repair** Repair or replace the wiring harness.	Repair Complete

STEP 3B: Check Vibration Amplitude Switch Contacts		
Condition: - Key switch OFF - Vibration amplitude switch to low amplitude icon setting. - Disconnect the wire that routes from the vibration amplitude switch to the solenoid HIGH. Refer to the Vibration Control Panel Switches procedure in the Compactor Repair section. - Disconnect the wire that routes from the vibration amplitude switch to the vibration switch. Refer to the Vibration Control Panel Switches procedure in the Compactor Repair section.		
Action	**Specifications / Repair**	**Next Step**
Check vibration switch contacts: • Place a multimeter test lead on terminal 1 of the vibration switch. • Place the remaining multimeter test lead on terminal 2 of the vibration amplitude switch	**Less than 10 ohms?** **Yes** .	4A
	Less than 10 ohms? **No** **Repair** Replace the vibration switch. Refer to the Vibratory Control Panel Switches procedure in the Compactor Repair section.	Repair Complete

STEP 4: Check Vibration Amplitude Solenoid		
STEP 4A: Check Vibration Solenoid Operation		
Condition: - Key switch to OFF position. - Remove vibration amplitude solenoid. Refer to the Vibration Amplitude Solenoid procedure in the Compactor Repair section.		
Action	**Specifications / Repair**	**Next Step**
Check vibration solenoid operation: • Connect a ground wire to the solenoid. • Connect a 12 VDC power supply to the LOW side terminal of the terminal. • Connect the power supply return wire to the solenoid return. Solenoid will shift from low to high if working correctly.	**Solenoid shifted?** **Yes** **Repair** Replace the vibratory motor. Refer to the Roller procedure in the Compactor Repair section.	Repair Complete
	Solenoid Shifted? **No** **Repair** Replace the Solenoid. Refer to the Vibration Amplitude Solenoid procedure in the Compactor Repair section.	Repair Complete

Can Not Turn Vibration ON From Forward/Reverse Lever

Symptoms
The compactor vibration works in the low and high amplitude settings when the vibration switch is in the CONT position. When the vibration switch is set to the lever icon and the engine switch is set to the full position the vibration will not activate using the forward/reverse lever button.

How to Use This Troubleshooting Procedure
This symptom tree can be used to troubleshoot Can Not Turn Vibration ON From Forward/Reverse Lever problem. Start by performing Step 1 troubleshooting. Step 1 will ask a series of questions and will provide a list of troubleshooting steps to be performed depending on the symptom.

Shop Talk
The compactor vibration system is an electrically activated, hydraulic motor driven system. The following switches are used in the vibration system:

- Throttle switch – When in the FULL position allows input voltage to be routed to the vibration switch and forward/reverse lever switch.
- Vibration Switch – Allows selection of CONT vibration or allows forward/reverse lever switch to have control.
- Vibrator Amplitude Switch – Selects from high to low vibration amplitude.
- Forward/Reverse lever switch – When vibration switched to the forward/reverse lever icon the switch allows activation of the vibration system from the forward/reverse lever. Push button once to activate, push button a second time to deactivate.

When the engine is started and FULL speed is selected on the engine speed switch 12 VDC is routed to the vibration switch. If the switch is in the CONT position 12 VDC is routed to the vibration amplitude switch. Depending on the setting of the vibration amplitude switch, the 12 VDC signal will be routed to the high side or low side of the solenoid.

When the solenoid receives signal it switches to the high or low side position. The shift in the solenoid valve routes the input hydraulic pressure to the second port, which will change the direction of the hydraulic motor.

The vibrator shaft has a throw that moves when the direction changes. When in the high amplitude mode the throw moves to one area and when the low amplitude is selected the throw moves to a set point, which allows the shaft to deliver less vibration with the same speed.

The engine speed select switch must be in the FULL position to enable vibration.

Troubleshooting Summary

STEP 1: Check Vibration Switch

- STEP 1A: Check Wire Vibration Switch to Forward/Reverse Lever Switch Wire
- STEP 1B: Check Vibration Switch Contacts

STEP 2: Check Forward Reverse Lever Switch

- STEP 2A: Check Wire From Forward/Reverse Lever Switch to Vibration Amplitude Switch LOW
- STEP 2B: Check Wire From Forward/Reverse Lever Switch to Vibration Amplitude Switch HIGH
- STEP 2C: Check Forward/Reverse Lever Switch Contacts

STEP 1: Check Vibration Switch		
STEP 1A: Check Vibration Switch to Forward/Reverse Lever Switch Wire		
Condition: - Key switch to OFF position. - Remove wire to vibration switch from forward/reverse lever switch. Refer to the Forward/Reverse Lever Switch procedure in the Compactor Repair Section. - Remove wire to vibration lever switch from vibration switch. Refer to the Vibratory Control Panel Switches procedure in the Compactor Repair section.		
Action	**Specifications / Repair**	**Next Step**
Check wire from engine speed change switch to vibration switch: • Connect one end of a jumper on the vibration switch wire to forward/reverse lever switch. • Connect the other end of the jumper to ground. • Place a multimeter test lead on the forward/reverse lever wire to vibration switch. • Place the remaining multimeter test lead on ground. .	**Less than 10 ohms?** **Yes**	2B
	Less than 10 ohms? **No** **Repair** Repair or replace the wiring harness.	Repair Complete

STEP 1B: Check Vibration Switch Contacts		
Condition: - Key switch OFF - Disconnect the wire that routes from the vibration switch to the forward/reverse lever switch. Refer to the Vibration Control Panel Switches procedure in the Compactor Repair Section. - Disconnect the wire that routes from the engine speed change switch to the vibration switch. Refer to the Engine Speed Change Switch procedure in the Compactor Repair section. - Vibration switch set to the forward/reverse lever icon.		
Action	**Specifications / Repair**	**Next Step**
Check vibration switch contacts: • Place a multimeter test lead on terminal 3 of the vibration switch. • Place the remaining multimeter test lead on terminal 1 of the engine change switch.	**Less than 10 ohms?** **Yes** .	2A
	Less than 10 ohms? **No** **Repair** Replace the vibration switch. Refer to the Vibratory Control Panel Switches procedure in the Compactor Repair section.	Repair Complete

STEP 2: Check Forward/Reverse Lever Switch		
STEP 2A: Check Wire From Forward/Reverse Lever Switch to Vibration Amplitude Switch LOW		
Condition: - Key switch to OFF position. - Remove forward/reverse lever switch to vibration amplitude switch LOW wire. Refer to the Vibratory Control Panel Switches procedure in the Compactor Repair section. - Remove the vibration amplitude switch LOW to forward/reverse lever wire. Refer to the Vibratory Control Panel Switches procedure in the Compactor Repair section.		
Action	**Specifications / Repair**	**Next Step**
Check wire from vibration switch to vibration amplitude switch: • Connect one end of a jumper to the vibration amplitude switch LOW wire that routes to the forward reverse lever switch. • Connect the other end of the jumper to ground. • Place a multimeter test lead on the forward/reverse switch wire that routes to vibration amplitude switch LOW. • Place the remaining multimeter test lead on ground. .	**Less than 10 ohms?** **Yes**	2B
	Less than 10 ohms? **No** **Repair** Repair or replace the wiring harness.	Repair Complete

STEP 2B: Check Wire From Forward/Reverse Lever Switch to Vibration Amplitude Switch HIGH		
Condition: - Key switch to OFF position. - Remove forward/reverse lever switch to vibration amplitude switch HIGH wire. Refer to the Vibratory Control Panel Switches procedure in the Compactor Repair section. - Remove the vibration amplitude switch HIGH to forward/reverse lever wire. Refer to the Vibratory Control Panel Switches procedure in the Compactor Repair section.		
Action	**Specifications / Repair**	**Next Step**
Check wire from vibration switch to vibration amplitude switch: • Connect one end of a jumper to the vibration amplitude switch HIGH wire that routes to the forward reverse lever switch. • Connect the other end of the jumper to ground. • Place a multimeter test lead on the forward/reverse switch wire that routes to vibration amplitude switch HIGH. • Place the remaining multimeter test lead on ground. .	**Less than 10 ohms?** **Yes**	2C
	Less than 10 ohms? **No** **Repair** Repair or replace the wiring harness.	Repair Complete

STEP 2C: Check Vibration Amplitude Switch Contacts		
Condition: - Key switch OFF. - Disconnect the Forward/Reverse Lever Switch. Refer to the Forward/Reverse Lever Switch Procedure in the Compactor Repair Section.		
Action	**Specifications / Repair**	**Next Step**
Check vibration switch contacts: • Place a multimeter test lead on terminal 1 of the vibration switch. • Place the remaining multimeter test lead on terminal 2 of the vibration amplitude switch. • Push the forward/reverse lever switch.	**Less than 10 ohms?** **Yes** .	3A
	Less than 10 ohms? **No** **Repair** Replace the forward/reverse lever switch. Refer to the Forward/Reverse Lever Switch procedure in the Compactor Repair section.	Repair Complete

STEP 3: Check Vibration Amplitude Solenoid		
STEP 3A: Check Vibration Solenoid Operation		
Condition: - Key switch to OFF position. - Remove vibration amplitude solenoid. Refer to the Vibration Amplitude Solenoid procedure in the Compactor Repair section.		
Action	**Specifications / Repair**	**Next Step**
Check vibration solenoid operation: • Connect a ground wire to the solenoid. • Connect a 12 VDC power supply to the positive terminal of the solenoid • Connect the power supply return to the return terminal of the solenoid. Solenoid will shift from low to high if working correctly.	**Solenoid shifted?** **Yes** **Repair** Replace the vibratory motor. Refer to the Roller procedure in the Compactor Repair section.	Repair Complete
	Solenoid Shifted? **No** **Repair** Replace the Solenoid. Refer to the Vibration Amplitude Solenoid procedure in the Compactor Repair section.	Repair Complete

Compactor Will Not Start

WARNING

To reduce the possibility of personal injury and equipment damage, always shut down the compactor when the Engine Warning Lamp is illuminated.

Symptoms

The compactor will not start. The engine can crank but does not start or the engine does not crank.

How to Use This Troubleshooting Procedure

This symptom tree can be used to troubleshoot a Compactor Will Not Start condition. Start by performing Step 1 troubleshooting. Step 1 will ask a series of questions and will provide a list of troubleshooting steps to be performed depending on the symptom.

Shop Talk

The compactor engine is electronically controlled. The ECM controls fuel and airflow into the engine. If an engine problem exists the starter will still engage and the engine will crank, but will not start. If the engine will not crank the compactor start circuit is faulty.

When the start switch is turned to the START position, power from the fuse box is routed to the ECM for start switch ON acknowledgement. Power is also routed to the battery relay coil. The battery relay coil energizes allowing power to be routed to the neutral safety switch.

When the directional control lever is in the neutral position, power is routed to the interlock relay coil; a path is completed to the starter.

Check the fuel level of the compactor prior to beginning this procedure.

Troubleshooting Summary

STEP 1: Engine or Start Circuit
- STEP 1A: Crank Engine
- STEP 1B: Inspect Wiring Harness Connector
- STEP 1C: Check Start Switch to ECM Wire
- STEP 1D: Check for Active Fault Code(s)

STEP 2: Check Start Circuit
- STEP 2A: Check Battery Voltage
- STEP 2B: Check Neutral Safety Switch
  - STEP 2B1: Check Neutral Safety Switch Adjustment
  - STEP 2B2: Check Neutral Safety Switch Contacts.
  - STEP 2B3: Check Fuse Box Fuse
  - STEP 2B4: Check Wire From Fuse Box to Neutral Safety Switch
  - STEP 2B5: Check Fuse Box to Alternator Wire
  - STEP 2B6: Check Alternator to Battery Relay Wire
  - STEP 2B7: Check 75 Amp Fuse
  - STEP 2B8: Check Neutral Safety Switch to Interlock Relay Coil Wire
- STEP 2C: Check Interlock Relay
  - STEP 2C1: Check Fuse F10
  - STEP 2C2: Check Start Switch to Interlock Relay Wire
  - STEP 2C3: Check Interlock Relay to Fuse Box Wire
  - STEP 2C4: Test Interlock Relay
- STEP 2D: Check Starter Relay
  - STEP 2D1: Check Fuse Box to Starter Relay Input Coil Wire
  - STEP 2D2: Check Starter Relay Output Coil to Starter Wire.
  - STEP 2D3: Check Starter Relay Input Contact to Starter Wire
  - STEP 2D4: Check Starter Relay Output Contact to Starter Wire
  - STEP 2D5: Check Starter to Chassis Ground Wire
  - STEP 2D6: Test Starter Relay
- STEP 2E: Check Battery Relay
  - STEP 2E1: Check Battery Relay Input Coil Wire to Start Switch
  - STEP 2E2: Check Battery Relay Output Coil Wire to Chassis Ground
  - STEP 2E3: Check Battery Supply Wire to Battery Relay Input Contact
  - STEP 2E4: Test Battery Relay
- STEP 2F: Check Start Switch
  - STEP 2F1: Check Start Switch to Battery Relay Wire Output Contact Wire
  - STEP 2F2: Check 65 Amp Fuse
  - STEP 2F3: Check Start Switch B to BR Contacts
  - STEP 2F4: Check Start Switch B to C Contacts

STEP 1: Engine or Start Circuit		
STEP 1A: Crank the Engine		
Condition: - Turn start switch to the START position.		
Action	**Specifications / Repair**	**Next Step**
Crank the engine.	**Did the engine crank?** **Yes**	1B
	Did the engine Crank? **No**	2B

STEP 1B: Inspect Wiring Harness Connector		
Condition: - Key switch OFF - Disconnect ECM 50-pin connector (compactor harness connector).		
Action	**Specifications / Repair**	**Next Step**
Inspect the 50-pin connector for the following: • Loose connector • Corroded pins • Bent or broken Pins • Pushed back or expanded pins • Moisture in or on the connector • Missing or damaged connector seals. • Dirt or debris in or on the connector pins • Connector shell broken • Wire insulation damage • Damaged connector locking tab.	**Connector Dirty or Damaged?** **Yes** **Repair** Clean, repair or replace the connector.	Repair Complete
	Connector Dirty or Damaged? **No**	1C

STEP 1C: Check Start Switch to ECM Wire		
Condition: - Disconnect Batteries. - Remove front panel on operators console. Refer to the Start Switch procedure in the Compactor Repair section. - Disconnect the ECM 50-pin connector.		
Action	**Specifications / Repair**	**Next Step**
Check start switch to ECM wire: • Disconnect the starter switch wire that connects to the ECM. • Connect one end of a jumper to the starter switch wire. • Connect the remaining end of the jumper to chassis ground. • Place a multimeter test lead on the keyswitch signal pin of the ECM 50-pin connector. • Place the remaining test lead on chassis ground.	**Less than 10 ohms?** **Yes** **Repair** Contact the nearest Cummins® Authorized Repair Facility for faulty ECM.	1D
	Less than 10 ohms? **No** **Repair** Repair or replace the wiring harness.	Repair Complete

STEP 1D: Check for Active Fault Code(s)		
Condition: - Turn start switch to ON position. - Open diagnostic switch access cover on steering column.		
Action	**Specifications / Repair**	**Next Step**
Verify active fault codes: • Place the diagnostic ON/OFF switch into the ON position. • Check diagnostic lamps.	**Diagnostic lamp flashing fault code?** **Yes** **Repair** Contact the local Cummins® Authorized Repair Facility for ECM failure.	Repair Complete
	Diagnostic lamp flashing fault codes? **No**	2A

STEP 2 Check Start Circuit		
STEP 2A: Check Battery Voltage		
Condition: - Open battery access door on compactor.		
Action	**Specifications / Repair**	**Next Step**
Check Battery Voltage: • Place the positive multimeter test lead on the positive battery terminal. • Place the negative multimeter test lead on the negative battery terminal.	**Less than 12 VDC?** **Yes** **Repair** Charge or replace the battery.	Repair Complete
	Less than 12 VDC? **No**	2B

STEP 2B: Check Neutral Safety Switch		
STEP 2B1: Check the Neutral Safety Switch Adjustment		
Condition: - Key switch OFF - Remove the directional control lever cover. Refer to the Directional Control Lever Micro-Switches in the Compactor Repair Section.		
Action	**Specifications / Repair**	**Next Step**
Check the neutral safety switch adjustment: • Move the directional control lever to the full forward position. • Adjust the mounting nuts on the switch so the plunger is completely depressed. • Move directional control lever to full reverse position. Make sure plunger is fully depressed.	**Neutral safety switch adjusted?** **Yes**	2B2
	Neutral safety switch adjusted? **No** **Repair** Adjust the neutral safety switch.	Repair Complete

STEP 2B2: Check the Neutral Safety Switch Contacts		
Condition: - Key switch OFF - Remove the directional control lever cover. Refer to the Directional Control Lever Micro-Switches in the Compactor Repair Section.		
Action	**Specifications / Repair**	**Next Step**
Check the neutral safety switch contacts: • Record location of wires and disconnect neutral safety switch. • Move the directional control lever to the full forward position. • Place a multimeter test lead on the NC terminal of the neutral safety switch. • Place the remaining test lead on the neutral safety switch COM terminal.	**Less than 10 ohms?** **Yes**	2B3
	Less than 10 ohms? **No** **Repair** Replace the neutral safety switch. Refer to the Directional Control Lever Micro-Switches procedure in the Compactor Repair section.	Repair Complete

STEP 2B3: Check Fuse Box Fuse		
Condition: - Key switch OFF - Open access door on steering column. The fuse box is located on the door. Refer to the Operator's Station Relays and Diode procedure in the Compactor Repair section for fuses box location. - Remove fuse box fuse (F9). - Refer to the Wiring Diagram in this section for wire colors and connector pin location.		
Action	**Specifications / Repair**	**Next Step**
Check fuse box fuse (F9): • Place a multimeter test lead on one leg of the fuse. • Place the remaining multimeter test lead on the other leg of the fuse.	**Less than 10 ohms?** **Yes** .	2B4
	Less than 10 ohms? **No** **Repair** Replace the fuse.	Repair Complete

STEP 2B4: Check Wire From Fuse Box to Neutral Safety Switch		
Condition: - Key switch OFF. - Open access door on steering column. The fuse box is located on the door. Refer to the Operator's Station Relays and Diode procedure in the Compactor Repair section for fuses block location. - Remove fuse box fuse (F9). - Disconnect the fuse box to neutral safety switch wire. Refer to the Directional Control Lever Micro-Switches procedure in the Compactor Repair section. - Refer to the Wiring Diagram in this section for wire colors and connector pin location.		
Action	**Specifications / Repair**	**Next Step**
Check wire from fuse box to control box: • Connect one end of a jumper onto the supply wire harness connector at the neutral safety switch. • Connect the remaining end of the jumper to ground. • Place a multimeter test lead on the fuse box terminal that supplies the backup neutral safety switch. • Place the remaining multimeter test lead onto chassis ground.	**Less than 10 ohms?** **Yes**	2B5
	Less than 10 ohms? **No** **Repair** Repair or replace the compactor harness.	Repair Complete

STEP 2B5: Check Fuse Box to Alternator Wire		
Condition: - Key switch OFF. - Disconnect the battery. Refer to the Engine Start Switch Procedure in the Compactor Repair section. - Disconnect the wire on the fuse box that connects to the alternator BAT connection. - Disconnect the wire on the alternator that connects to the fuse box. - Refer to the Wiring Diagram in this section for wire colors and connector pin location.		
Action	**Specifications / Repair**	**Next Step**
Check the fuse box to alternator wire. • Place one end of a jumper wire onto the wire that was removed from the alternator. • Place the other end of the jumper to ground. • Place a multimeter test lead onto the fuse box terminal that connects the alternator BAT wire. • Place the remaining multimeter test lead onto chassis ground.	**Less than 10 ohms?** **Yes**	2B6
	Less than 10 ohms? **No** **Repair** Repair or replace the compactor harness.	Repair Complete

STEP 2B6: Check the Alternator to Battery Relay Wire		
Condition: - Key switch OFF. - Disconnect the battery. Refer to the Engine Start Switch Procedure in the Compactor Repair section. - Disconnect the wire on the alternator that connects to the battery relay. - Disconnect the wire on the battery relay that connects to the alternator. - Refer to the Wiring Diagram in this section for wire colors and connector pin location.		
Action	**Specifications / Repair**	**Next Step**
Check the alternator to battery relay wire: • Place one end of a jumper wire onto the wire that was removed from the alternator. • Place the other end of the jumper to ground. • Place a multimeter test lead onto the battery relay wire that connects to the alternator. • Place the remaining multimeter test lead onto chassis ground.	**Less than 10 ohms?** **Yes**	2B7
	Less than 10 ohms? **No** **Repair** Repair or replace the compactor harness.	Repair Complete

STEP 2B7: Check 75 Amp Fuse		
Condition: - Key switch OFF - Remove the 75 Amp fuse. Refer to the Fuse 65 Amp and Above Procedure in the Compactor Repair section. - Refer to the Wiring Diagram in this section for wire colors and connector pin location.		
Action	**Specifications / Repair**	**Next Step**
Check the 75 amp fuse: • Place a multimeter test lead on one leg of the fuse. • Place the remaining multimeter test lead on the other leg of the fuse.	**Less than 10 ohms?** **Yes** **Repair** Replace the fuse. Refer to the Fuse 65 Amp and Above Procedure in the Compactor Repair section.	Repair Complete
	Less than 10 ohms? **No**	2B8

STEP 2B8: Check Neutral Safety Switch to Interlock Relay Coil Wire		
Condition: - Keyswitch to OFF. - Open access door on steering column and disconnect interlock relay. The interlock relay is located on the door. Refer to the Operator's Station Relays and Diode procedure in the Compactor Repair section for fuses block location. - Disconnect the interlock relay to neutral safety switch wire on the neutral safety switch. Refer to the Directional Control Lever Micro-Switches procedure in the Compactor Repair section. - Refer to the Wiring Diagram in this section for wire colors and connector pin location.		
Action	**Specifications / Repair**	**Next Step**
Check neutral safety switch to interlock relay coil wire: • Connect one end of a jumper to the wire that connects to the interlock relay at the neutral safety switch. • Connect the remaining end of the jumper to chassis ground. • Place a multimeter test lead on the wire that routes to the neutral safety switch at the interlock relay connector. • Place the remaining test lead on chassis ground.	**Less than 10 ohms?** **Yes** **Repair**	2C
	Less than 10 ohms? **No** **Repair** Repair or replace the wiring harness.	Repair Complete

STEP 2C: Check Interlock Relay		
STEP 2C1: Check Fuse F10		
Condition: - Key switch OFF - Remove the fuse F10. - Refer to the Wiring Diagram in this section for wire colors and connector pin location.		
Action	**Specifications / Repair**	**Next Step**
Check fuse F10: • Place a multimeter test lead on one leg of the fuse. • Place the remaining multimeter test lead on the other leg of the fuse.	**Less than 10 ohms?** **Yes** **Repair** Replace the fuse.	Repair Complete
	Less than 10 ohms? **No**	2C2

STEP 2C2: Check Start Switch to Interlock Relay Wire		
Condition: - Key switch OFF - Open access door on steering column and disconnect interlock relay. The interlock relay is located on the door. Refer to the Operator's Station Relays and Diode procedure in the Compactor Repair section for fuses block location. - Disconnect the interlock relay to start switch wire at the starter switch. Refer to the Engine Start Switch procedure in the Compactor Repair section. - Refer to the Wiring Diagram in this section for wire colors and connector pin location. -		
Action	**Specifications / Repair**	**Next Step**
Check start switch to interlock relay wire: • Connect a jumper to the interlock relay to start switch wire on at the interlock relay. • Connect the remaining end of the jumper to chassis ground. • Connect a multimeter test lead to the start switch to interlock relay wire at the start switch. • Connect the remaining multimeter test lead to chassis ground.	**Less than 10 ohms?** **Yes**	2C3
	Less than 10 ohms? **No** **Repair** Repair or replace the harness.	Repair Complete

STEP 2C3: Check Interlock Relay to Fuse Box Wire		
Condition: - Key switch OFF - Remove Fuse F10. - Open access door on steering column and disconnect interlock relay. The interlock relay is located on the door. Refer to the Operator's Station Relays and Diode procedure in the Compactor Repair section for fuses block location. - Refer to the Wiring Diagram in this section for wire colors and connector pin location.		
Action	**Specifications / Repair**	**Next Step**
Check the fuse box to alternator wire: • Connect a jumper wire to the interlock to fuse box wire at the interlock relay connector. • Connect the other end of the jumper to chassis ground. • Place a multimeter test lead onto the fuse box terminal of F10 that connects to the interlock relay wire. • Place the remaining multimeter test lead onto chassis ground.	**Less than 10 ohms?** **Yes**	2C4
	Less than 10 ohms? **No** **Repair** Repair or replace the compactor harness.	Repair Complete

STEP 2C4: Test Interlock Relay.		
Condition: - Key switch OFF - Open access door on steering column and remove interlock relay. The interlock relay is located on the door. Refer to the Operator's Station Relays and Diode procedure in the Compactor Repair section. - Refer to the Wiring Diagram in this section for wire colors and connector pin location.		
Action	**Specifications / Repair**	**Next Step**
Check the fuse box to alternator wire: • Connect the supply lead from a 12 VDC power supply to pin 1 of the relay. • Connect the return lead from the 12 VDC power supply to pin 2 of the relay. • Place a multimeter test lead onto pin 3 of the relay. • Place the remaining multimeter test lead onto pin 4 of the relay.	**Less than 10 ohms?** **Yes**	2D1
	Less than 10 ohms? **No** **Repair** Replace the interlock relay. Refer to the Operator's Station Relays and Diode procedure in the Compactor Repair section.	Repair Complete

STEP 2D:Check Starter Relay		
STEP 2D1: Check Fuse Box to Starter Relay Input Coil Wire		
Condition: - Key switch OFF - Remove Fuse F10. Refer to the Operator's Station Relays and Diode procedure in the Compactor Repair section for fuses block location. - Disconnect the starter relay. Refer to the Operator's Station Relays and Diode procedure in the Compactor Repair section for fuses block location. - Refer to the Wiring Diagram in this section for wire colors and connector pin location.		
Action	**Specifications / Repair**	**Next Step**
Check the interlock relay to fuse box wire: • Connect a jumper wire to the fuse box to starter relay input coil wire at the starter relay connector. • Connect the other end of the jumper to chassis ground. • Place a multimeter test lead onto the fuse box terminal of F10 that connect the starter relay input coil wire. • Place the remaining multimeter test lead onto chassis ground.	**Less than 10 ohms?** **Yes**	2D2
	Less than 10 ohms? **No** **Repair** Repair or replace the compactor harness.	Repair Complete

STEP 2D2: Check Starter Relay Output Coil to Starter Wire		
Condition: - Key switch OFF. - Disconnect the starter ground wires from the starter. - Disconnect the starter relay. Refer to the Operator's Station Relays and Diode procedure in the Compactor Repair section for fuses block location. - Refer to the Wiring Diagram in this section for wire colors and connector pin location.		
Action	**Specifications / Repair**	**Next Step**
Check the interlock relay to fuse box wire: • Connect a jumper wire to the fuse box to starter relay output coil wire at the starter relay connector. • Connect the other end of the jumper to chassis ground. • Place a multimeter test lead onto the starter relay output coil wire at the starter. • Place the remaining multimeter test lead onto chassis ground.	**Less than 10 ohms?** **Yes**	2D3
	Less than 10 ohms? **No** **Repair** Repair or replace the compactor harness.	Repair Complete

STEP 2D3: Check Starter Relay Input Contact to Starter Wire		
Condition: - Key switch OFF. - Disconnect the starter relay. Refer to the Operator's Station Relays and Diode procedure in the Compactor Repair section for fuses block location. - Disconnect the starter relay input contact wire at the starter (terminal with two wires). - Refer to the Wiring Diagram in this section for wire colors and connector pin location.		
Action	**Specifications / Repair**	**Next Step**
Check the starter relay input contact to starter wire: • Connect a jumper wire to the fuse box to starter relay input contact wire at the starter relay connector. • Connect the other end of the jumper to chassis ground. • Place a multimeter test lead onto the starter relay input contact wire at the starter. • Place the remaining multimeter test lead onto chassis ground.	**Less than 10 ohms?** **Yes**	2D4
	Less than 10 ohms? **No** **Repair** Repair or replace the compactor harness.	Repair Complete

STEP 2D4: Check Starter Relay Output Contact to Starter Wire		
Condition: - Key switch OFF - Disconnect the starter relay. Refer to the Operator's Station Relays and Diode procedure in the Compactor Repair section for fuses block location. - Disconnect the starter relay input contact wire at the starter (terminal with two power wires). - Refer to the Wiring Diagram in this section for wire colors and connector pin location.		
Action	**Specifications / Repair**	**Next Step**
Check the starter relay output contact to starter wire: • Connect a jumper wire to the fuse box to starter relay input contact wire at the starter relay connector. • Connect the other end of the jumper to chassis ground. • Place a multimeter test lead onto the starter relay output contact wire at the starter. • Place the remaining multimeter test lead onto chassis ground.	**Less than 10 ohms?** **Yes**	2D5
	Less than 10 ohms? **No** **Repair** Repair or replace the compactor harness.	Repair Complete

STEP 2D5: Check Starter to Chassis Ground Wire		
Condition: - Key switch OFF. - Disconnect the starter ground wires from the starter. - Refer to the Wiring Diagram in this section for wire colors and connector pin location.		
Action	**Specifications / Repair**	**Next Step**
Check starter to chassis ground wire: • Place a multimeter test lead onto the starter onto the starter ground wire at the starter. • Place the remaining multimeter test lead onto chassis ground.	**Less than 10 ohms?** **Yes**	2D6
	Less than 10 ohms? **No** **Repair** Repair or replace the compactor harness.	Repair Complete

STEP 2D6: Test Starter Relay		
Condition: - Key switch OFF. - Open access door on steering column and remove starter relay. The starter relay is located on the door. Refer to the Operator's Station Relays and Diode procedure in the Compactor Repair section. - Refer to the Wiring Diagram in this section for wire colors and connector pin location.		
Action	**Specifications / Repair**	**Next Step**
Check the fuse box to alternator wire: • Connect the supply lead from a 12 VDC power supply to coil supply pin of the relay. • Connect the return lead from the 12 VDC power supply to coil return of the relay. • Place a multimeter test lead onto contact input pin of the relay. • Place the remaining multimeter test lead onto the contact output pin.	**Less than 10 ohms?** **Yes**	2E
	Less than 10 ohms? **No** **Repair** Replace the starter relay. Refer to the Starter Relay procedure in the Compactor Repair section.	Repair Complete

STEP 2E:Check Battery Relay		
STEP 2E1: Check Battery Relay Input Coil Wire to Start Switch		
Condition: - Key switch OFF. - Disconnect the battery relay input coil wire for the start switch at the battery relay. Refer to the Start Switch procedure in the Compactor Repair section. - Disconnect the battery relay input coil wire from the battery relay. Refer to the Battery Relay procedure in the Compactor Repair section. - Refer to the Wiring Diagram in this section for wire colors and connector pin location.		
Action	**Specifications / Repair**	**Next Step**
Check the interlock relay to fuse box wire: • Connect a jumper wire to the battery relay coil input wire at the start switch. • Connect the other end of the jumper to chassis ground. • Place a multimeter test lead onto the coil input wire at the battery relay. • Place the remaining multimeter test lead onto chassis ground.	**Less than 10 ohms?** **Yes**	2E2
	Less than 10 ohms? **No** **Repair** Repair or replace the compactor harness.	Repair Complete

STEP 2E2: Check Battery Relay Output Coil Wire to Chassis Ground		
Condition: - Key switch OFF. - Disconnect the battery relay ground wire from the battery relay. Refer to the Battery Relay procedure in the Compactor Repair section. - Refer to the Wiring Diagram in this section for wire colors and connector pin location.		
Action	**Specifications / Repair**	**Next Step**
Check the interlock relay to fuse box wire: • Place a multimeter test lead onto the battery ground wire at the battery relay. • Place the remaining multimeter test lead onto chassis ground.	**Less than 10 ohms?** **Yes**	2E3
	Less than 10 ohms? **No** **Repair** Repair or replace the compactor harness.	Repair Complete

STEP 2E3: Check Battery Supply Wire to Battery Relay Input Contact		
Condition: - Key switch OFF. - Refer to the Wiring Diagram in this section for wire colors and connector pin location.		
Action	**Specifications / Repair**	**Next Step**
Check battery supply wire to battery relay input contact: • Place the positive multimeter test lead on the battery input contact of the battery relay. • Place the negative multimeter test lead on chassis ground.	**Less than 12 VDC?** **Yes** **Repair** Repair or replace the compactor harness.	Repair Complete
	Less than 12 VDC? **No**	Repair Complete

STEP 2E4: Test Battery Relay		
Condition: - Key switch OFF. - Remove battery relay. Refer to the Battery Relay procedure in the Compactor Repair section. - Refer to the Wiring Diagram in this section for wire colors and connector pin location.		
Action	**Specifications / Repair**	**Next Step**
Check the fuse box to alternator wire: • Connect the supply lead from a 12 VDC power supply to coil supply pin of the relay. • Connect the return lead from the 12 VDC power supply to coil return of the relay. • Place a multimeter test lead onto contact input pin of the relay. • Place the remaining multimeter test lead onto the contact output pin.	**Less than 10 ohms?** **Yes**	2E
	Less than 10 ohms? **No** **Repair** Replace the battery relay. Refer to the Battery Relay procedure in the Compactor Repair section.	Repair Complete

STEP 2F:Check Start Switch		
STEP 2F1: Check Start Switch to Battery Relay Output Contact Wire		
Condition: - Key switch OFF. - Disconnect the starter switch power wire (B) from the start switch. Refer to the Start Switch procedure in the Compactor Repair section. - Disconnect the battery start switch power wire from the battery relay. Refer to the Battery Relay procedure in the Compactor Repair section. - Refer to the Wiring Diagram in this section for wire colors and connector pin location.		
Action	**Specifications / Repair**	**Next Step**
Check start switch to battery relay output contact wire: • Connect a jumper wire to the battery power wire at the start switch. • Connect the other end of the jumper to chassis ground. • Place a multimeter test lead onto the start switch power wire at the battery relay. • Place the remaining multimeter test lead onto chassis ground.	**Less than 10 ohms?** **Yes**	2F3
	Less than 10 ohms? **No**	2F2

STEP 2F2: Check 65 Amp Fuse		
Condition: - Key switch OFF - Remove the 65 amp fuse. Refer to the Fuses 65 Amp and Above procedure in the Compactor Repair section. - Refer to the Wiring Diagram in this section for wire colors and connector pin location.		
Action	**Specifications / Repair**	**Next Step**
Check the 65 amp fuse: • Place a multimeter test lead on one leg of the fuse. • Place the remaining multimeter test lead on the other leg of the fuse.	**Less than 10 ohms?** **Yes** **Repair** Replace the fuse.	Repair Complete
	Less than 10 ohms? **No**	2F3

STEP 2F3: Check Start Switch B to BR Contacts		
Condition: - Key switch OFF - Disconnect the battery. Refer to the Engine Start Switch Procedure in the Compactor Repair section. - Record location of wires and disconnect the start switch. Refer to the Engine Start Switch Procedure in the Compactor Repair section.		
Action	**Specifications / Repair**	**Next Step**
Check start switch B to BR contacts: • Connect a multimeter test lead to the start switch B terminal. • Connect the remaining multimeter test lead to the start switch BR terminal. • Turn the start switch to the START position.	**Less than 10 ohms?** **Yes**	2F4
	Less than 10 ohms? **No** **Repair** Replace the start switch. Refer to the Engine Start Switch procedure in the Compactor Repair Section.	Repair Complete

STEP 2F4: Check Start Switch B to C Contacts		
Condition: - Key switch OFF - Disconnect the battery. Refer to the Engine Start Switch Procedure in the Compactor Repair section. - Record location of wires and disconnect the start switch. Refer to the Engine Start Switch Procedure in the Compactor Repair section.		
Action	**Specifications / Repair**	**Next Step**
Check start switch B to C contacts: • Connect a multimeter test lead to the start switch B terminal. • Connect the remaining multimeter test lead to the start switch C terminal. • Turn the start switch to the START position.	**Less than 10 ohms?** **Yes** **Repair** Contact Sakai America for authorization to replace the starter. Refer to the Service Manual, ISB, ISBe4, and QSB (Common Rail Fuel System) Series Engines, Bulletin 4021271.	Repair Complete
	Less than 10 ohms? **No** **Repair** Replace the start switch. Refer to the Engine Start Switch procedure in the Compactor Repair Section.	Repair Complete

Engine Will Not Idle Correctly

Symptoms
The engine starts but will not idle at the correct speed. The engine functions properly in Mid and Full range.

How to Use This Troubleshooting Procedure
This symptom tree can be used to troubleshoot an Engine Will Not Idle condition. Start by performing Step 1 troubleshooting. Step 1 will ask a series of questions and will provide a list of troubleshooting steps to be performed depending on the symptom.

Shop Talk
The engine is an electronically controlled engine. It is monitored and controlled by the ECM (Electronic Control Module). The engine speed change switch interfaces the operator to the engine ECM. The switch routes a signal to three input pins of the ECM. The switch position and definition of ECM input pins are:

- IDLE (900 rpm) – Speed signal transmitted to ISC1 (Intermediate Speed Control 1) pin in the ECM.
- MID (1800 rpm) – Speed signal transmitted to ISC2 (Intermediate Speed Control 2) pin in the ECM.
- Full (2300 rpm) – Speed signal transmitted to ISC3 (Intermediate Speed Control 3) pin in the ECM.

The ECM intermediate speed control inputs (1 through 3) bypass the throttle and act as pre-sets to the ECM.

If the ECM loses a preset value it will default to a predetermined idle speed. Examples of loss of a preset value for the switch are below.

- If the engine speed change is in the IDLE position and the signal at the ECM is lost the engine will idle at a predetermined idle speed. Remaining speed settings function correctly.
- If the engine speed change is in the MID position and the signal at the ECM is lost the engine will idle at a predetermined idle speed. Remaining speed settings function correctly.
- If the engine speed change is in the FULL position and the signal at the ECM is lost the engine will idle at a predetermined idle speed. Remaining speed settings function correctly.

Troubleshooting Summary

STEP 1: Check ECM Connector
- STEP 1A: Inspect Wiring Harness Connector

STEP 2: Check Engine Speed Change Switch
- STEP 2A: Check Engines Speed Change Switch to ECM Connector Wire
- STEP 2B: Check Wire from Engine Speed Change Switch to Throttle Relay Output Contact
- STEP 2C: Check Engine Speed Switch Contacts

STEP 3: Check Throttle Relay
- STEP 3A: Check Throttle Relay Input Contact Wire to ECM Connector
- STEP 3B: Test Throttle Relay

STEP 1 Check ECM Connector		
STEP 1A: Inspect Wiring Harness Connector		
Condition: - Key switch OFF - Disconnect ECM 50-pin connector (compactor harness connector).		
Action	**Specifications / Repair**	**Next Step**
Inspect the 50-pin connector for the following: • Loose connector • Corroded pins • Bent or broken Pins • Pushed back or expanded pins • Moisture in or on the connector • Missing or damaged connector seals. • Dirt or debris in or on the connector pins • Connector shell broken • Wire insulation damage • Damaged connector locking tab.	**Connector Dirty or Damaged?** **Yes** **Repair** Clean, repair or replace the connector.	Repair Complete
	Connector Dirty or Damaged? **No**	2A

STEP 2 Check Engine Speed Change Switch		
STEP 2A: Check Engine Speed Change Switch to ECM Connector Wire		
Condition: - Key switch OFF - Disconnect ECM 50-pin connector (compactor harness connector). - Disconnect the engine speed change switch wire (ISC1) to ECM connector at the engine speed change switch. Refer to the Engine Speed Change Switch procedure in the Compactor Repair section.		
Action	**Specifications / Repair**	**Next Step**
Check the engine speed change switch to ECM connector wire: • Connect a jumper wire to the wire that routes to the ECM connector at the engine speed change switch. • Connect the remaining jumper end to ground. • Place a multimeter test lead to the ISC1 Pin in the ECM connector. • Place the remaining multimeter test lead on ground.	**Less than 10 ohms?** **Yes**	2B
	Less than 10 ohms? **No** **Repair** Repair or replace the wiring harness.	Repair Complete

STEP 2B: Check Wire From Engine Speed Change Switch to Throttle Relay Output Contact		
Condition: - Key switch OFF - Disconnect the engine speed change switch to throttle relay wire at the engine speed change switch. Refer to the Engine Speed Change Switch Procedure in the Compactor Repair section. - Disconnect the throttle relay to engine speed change switch wire at the throttle relay. Refer to the Operator's Station Relays and Diode Procedure in the Compactor Repair section.		
Action	**Specifications / Repair**	**Next Step**
Check wire from engine speed change switch to throttle relay output contact: • Connect a jumper to the engine change switch wire at the throttle relay. • Connect the other end of the jumper to ground. • Place a multimeter test lead on the throttle relay wire at the engine speed switch. • Place the remaining multimeter test lead on ground.	**Less than 10 ohms?** **Yes**	2C1
	Less than 10 ohms? **No** **Repair** Replace the wire.	Repair Complete

STEP 2C Check Engine Speed Change Switch Contacts		
Condition: - Key switch OFF - Engine speed switch in the IDLE position. - Disconnect the engine speed change switch to throttle relay wire at the engine speed change switch. Refer to the Engine Speed Change Switch Procedure in the Compactor Repair section. - Disconnect the wire from ECM connector to engine speed change switch at the engine speed change switch. Refer to the Engine Speed Change Switch procedure in the Compactor Repair section.		
Action	**Specifications / Repair**	**Next Step**
Check Contacts 1 and 2: • Place a multimeter test lead on terminal 1 of the engine speed change switch. • Place the remaining multimeter test lead on terminal 2 of the engine change switch.	**Less than 10 ohms?** **Yes**	3A
	Less than 10 ohms? **No** **Repair** Replace the engine speed change switch. Refer to the Engine Speed Change Switch procedure in the Compactor Repair section.	Repair Complete

STEP 3: Check Throttle Relay		
STEP 3A: Check Throttle Relay Input Contact Wire to ECM Connector		
Condition: - Key switch OFF - Disconnect ECM 50-pin connector (compactor harness connector). - Disconnect the wire from throttle relay connector. Refer to the Operator's Station Relays and Diode procedure in the Compactor Repair section.		
Action	**Specifications / Repair**	**Next Step**
Check the engine speed change switch to ECM connector wire: • Connect a jumper wire to the engine speed switch wire that connects to the throttle relay at the throttle relay. • Connect the remaining jumper end to ground. • Place a multimeter test lead on the SW RETURN pin of the ECM 50 pin connector. • Place the remaining multimeter test lead on ground.	**Less than 10 ohms?** **Yes**	3B
	Less than 10 ohms? **No** **Repair** Repair or replace the wiring harness.	Repair Complete

STEP 3B: Test Throttle Relay.		
Condition: - Key switch OFF. - Open access door on steering column and remove interlock relay. The interlock relay is located on the door. Refer to the Operator's Station Relays and Diode procedure in the Compactor Repair section. - Refer to the Wiring Diagram in this section for wire colors and connector pin location.		
Action	**Specifications / Repair**	**Next Step**
Check the fuse box to alternator wire: • Connect the supply lead from a 12 VDC power supply to pin (a) of the relay. • Connect the return lead from the 12 VDC power supply to pin (b) of the relay. • Place a multimeter test lead onto pin (f) of the relay. • Place the remaining multimeter test lead onto pin (c) of the relay.	**Less than 10 ohms?** **Yes** **Repair** Contact the nearest Cummins® Authorized Repair Facility for ECM failure.	Repair Complete
	Less than 10 ohms? **No** **Repair** Replace the interlock relay. Refer to the Operator's Station Relays and Diode procedure in the Compactor Repair section.	Repair Complete

Engine Will Not Reach MID Speed

Symptoms
The engine starts but will not reach MID speed at the correct speed. The engine functions properly in Idle and Full range.

How to Use This Troubleshooting Procedure
This symptom tree can be used to troubleshoot an Engine Will Not Reach MID Speed condition. Start by performing Step 1 troubleshooting. Step 1 will ask a series of questions and will provide a list of troubleshooting steps to be performed depending on the symptom.

Shop Talk
The engine is an electronically controlled engine. It is monitored and controlled by the ECM (Electronic Control Module). The engine speed change switch interfaces the operator to the engine ECM. The switch routes a signal to three input pins of the ECM. The switch position and definition of ECM input pins are:

- IDLE (900 rpm) – Speed signal transmitted to ISC1 (Intermediate Speed Control 1) pin in the ECM.
- MID (1800 rpm) – Speed signal transmitted to ISC2 (Intermediate Speed Control 2) pin in the ECM.
- Full (2300 rpm) – Speed signal transmitted to ISC3 (Intermediate Speed Control 3) pin in the ECM.

The ECM intermediate speed control inputs (1 through 3) bypass the throttle and act as pre-sets to the ECM.

If the ECM loses a preset value it will default to a predetermined idle speed. Examples of loss of a preset value for the switch are below.

- If the engine speed change is in the IDLE position and the signal at the ECM is lost the engine will idle at a predetermined idle speed. Remaining speed settings function correctly.
- If the engine speed change is in the MID position and the signal at the ECM is lost the engine will idle at a predetermined idle speed. Remaining speed settings function correctly.
- If the engine speed change is in the FULL position and the signal at the ECM is lost the engine will idle at a predetermined idle speed. Remaining speed settings function correctly.

Troubleshooting Summary

STEP 1: Check ECM Connector
- STEP 1A: Inspect Wiring Harness Connector

STEP 2: Check Engine Speed Change Switch
- STEP 2A: Check Engines Speed Change Switch to ECM Connector Wire
- STEP 2B: Check Wire from Engine Speed Change Switch to Throttle Relay Output Contact
- STEP 2C: Check Engine Speed Switch Contacts

STEP 3: Check Throttle Relay
- STEP 3A: Check Throttle Relay Input Contact Wire to ECM Connector
- STEP 3B: Test Throttle Relay

STEP 1 Check ECM Connector		
STEP 1A: Inspect Wiring Harness Connector		
Condition: - Key switch OFF. - Disconnect ECM 50-pin connector (compactor harness connector).		
Action	**Specifications / Repair**	**Next Step**
Inspect the 50-pin connector for the following: • Loose connector • Corroded pins • Bent or broken Pins • Pushed back or expanded pins • Moisture in or on the connector • Missing or damaged connector seals. • Dirt or debris in or on the connector pins • Connector shell broken • Wire insulation damage • Damaged connector locking tab.	**Connector Dirty or Damaged?** **Yes** **Repair** Clean, repair or replace the connector.	Repair Complete
	Connector Dirty or Damaged? **No**	2A

STEP 2 Check Engine Speed Change Switch		
STEP 2A: Check Engine Speed Change Switch to ECM Connector Wire		
Condition: - Key switch OFF. - Disconnect ECM 50-pin connector (compactor harness connector). - Disconnect the engine speed change switch wire (ISC2) to ECM connector at the engine speed change switch. Refer to the Engine Speed Change Switch procedure in the Compactor Repair section.		
Action	**Specifications / Repair**	**Next Step**
Check the engine speed change switch to ECM connector wire: • Connect a jumper wire to the wire that routes to the ECM connector at the engine speed change switch. • Connect the remaining jumper end to ground. • Place a multimeter test lead to the ISC2 Pin in the ECM connector. • Place the remaining multimeter test lead on ground.	**Less than 10 ohms?** **Yes**	2B
	Less than 10 ohms? **No** **Repair** Repair or replace the wiring harness.	Repair Complete

STEP 2B: Check Wire From Engine Speed Change Switch to Throttle Relay Output Contact		
Condition: - Key switch OFF - Disconnect the engine speed change switch to throttle relay wire at the engine speed change switch. Refer to the Engine Speed Change Switch Procedure in the Compactor Repair section. - Disconnect the throttle relay to engine speed change switch wire at the throttle relay. Refer to the Operator's Station Relays and Diode Procedure in the Compactor Repair section.		
Action	**Specifications / Repair**	**Next Step**
Check wire from engine speed change switch to throttle relay output contact: • Connect a jumper to the engine change switch wire at the throttle relay. • Connect the other end of the jumper to ground. • Place a multimeter test lead on the throttle relay wire at the engine speed switch. • Place the remaining multimeter test lead on ground.	**Less than 10 ohms?** **Yes**	2C1
	Less than 10 ohms? **No** **Repair** Replace the wire.	Repair Complete

STEP 2C Check Engine Speed Change Switch Contacts		
Condition: - Key switch OFF - Engine speed switch in the IDLE position. - Disconnect the engine speed change switch to throttle relay wire at the engine speed change switch. Refer to the Engine Speed Change Switch Procedure in the Compactor Repair section. - Disconnect the wire from ECM connector to engine speed change switch at the engine speed change switch. Refer to the Engine Speed Change Switch procedure in the Compactor Repair section.		
Action	**Specifications / Repair**	**Next Step**
Check Contacts 1 and 3: • Place a multimeter test lead on terminal 1 of the engine speed change switch. • Place the remaining multimeter test lead on terminal 3 of the engine change switch.	**Less than 10 ohms?** **Yes**	3A
	Less than 10 ohms? **No** **Repair** Replace the engine speed change switch. Refer to the Engine Speed Change Switch procedure in the Compactor Repair section.	Repair Complete

STEP 3: Check Throttle Relay		
STEP 3A: Check Throttle Relay Input Contact Wire to ECM Connector		
Condition: - Key switch OFF. - Disconnect ECM 50-pin connector (compactor harness connector). - Disconnect the wire from throttle relay connector. Refer to the Operator's Station Relays and Diode procedure in the Compactor Repair section.		
Action	**Specifications / Repair**	**Next Step**
Check the engine speed change switch to ECM connector wire: • Connect a jumper wire to the engine speed switch wire that connects to the throttle relay. • Connect the remaining jumper end to ground. • Place a multimeter test lead on the SW RETURN pin of the ECM 50 pin connector • Place the remaining multimeter test lead on ground.	**Less than 10 ohms?** **Yes**	3B
	Less than 10 ohms? **No** **Repair** Repair or replace the wiring harness.	Repair Complete

STEP 3B: Test Throttle Relay.		
Condition: - Key switch OFF. - Open access door on steering column and remove interlock relay. The interlock relay is located on the door. Refer to the Operator's Station Relays and Diode procedure in the Compactor Repair section. - Refer to the Wiring Diagram in this section for wire colors and connector pin location.		
Action	**Specifications / Repair**	**Next Step**
Check the fuse box to alternator wire: • Connect the supply lead from a 12 VDC power supply to pin (a) of the relay. • Connect the return lead from the 12 VDC power supply to pin (b) of the relay. • Place a multimeter test lead onto pin (f) of the relay. • Place the remaining multimeter test lead onto pin (c) of the relay.	**Less than 10 ohms?** **Yes** **Repair** Contact the nearest Cummins® Authorized Repair Facility for failed ECM.	Repair Complete
	Less than 10 ohms? **No** **Repair** Replace the interlock relay. Refer to the Operator's Station Relays and Diode procedure in the Compactor Repair section.	Repair Complete

Engine Will Not Reach Full Speed

Symptoms
The engine starts but will not reach FULL speed. The engine functions properly in IDLE and MID range.

How to Use This Troubleshooting Procedure
This symptom tree can be used to troubleshoot an Engine Will Not Reach Full Speed condition. Start by performing Step 1 troubleshooting. Step 1 will ask a series of questions and will provide a list of troubleshooting steps to be performed depending on the symptom.

Shop Talk
The engine is an electronically controlled engine. It is monitored and controlled by the ECM (Electronic Control Module). The engine speed change switch interfaces the operator to the engine ECM. The switch routes a signal to three input pins of the ECM. The switch position and definition of ECM input pins are:

- IDLE (900 rpm) – Speed signal transmitted to ISC1 (Intermediate Speed Control 1) pin in the ECM.
- MID (1800 rpm) – Speed signal transmitted to ISC2 (Intermediate Speed Control 2) pin in the ECM.
- Full (2300 rpm) – Speed signal transmitted to ISC3 (Intermediate Speed Control 3) pin in the ECM.

The ECM intermediate speed control inputs (1 through 3) bypass the throttle and act as pre-sets to the ECM.

If the ECM loses a preset value it will default to a predetermined idle speed. Examples of loss of a preset value for the switch are below.

- If the engine speed change is in the IDLE position and the signal at the ECM is lost the engine will idle at a predetermined idle speed. Remaining speed settings function correctly.
- If the engine speed change is in the MID position and the signal at the ECM is lost the engine will idle at a predetermined idle speed. Remaining speed settings function correctly.
- If the engine speed change is in the FULL position and the signal at the ECM is lost the engine will idle at a predetermined idle speed. Remaining speed settings function correctly.

Troubleshooting Summary

STEP 1: Check ECM Connector
- STEP 1A: Inspect Wiring Harness Connector

STEP 2: Check Engine Speed Change Switch
- STEP 2A: Check Engines Speed Change Switch to Fuse Box F8 Wire
- STEP 2B: Check Wire from Engine Speed Change Switch to Throttle Relay Coil
- STEP 2C: Check Engine Speed Switch Contacts

STEP 3: Check Power Circuit
- STEP 3A: Check Fuse Box to Alternator Wire
- STEP 3B: Check Alternator to Battery Relay Wire
- STEP 3C: Check 75 Amp Fuse

STEP 4: Check Throttle Relay
- STEP 4A: Check Throttle Relay Ground Wire
- STEP 4B: Test Throttle Relay

STEP 1 Check ECM Connector		
STEP 1A: Inspect Wiring Harness Connector		
Condition: - Key switch OFF - Disconnect ECM 50-pin connector (compactor harness connector).		
Action	**Specifications / Repair**	**Next Step**
Inspect the 50-pin connector for the following: • Loose connector • Corroded pins • Bent or broken Pins • Pushed back or expanded pins • Moisture in or on the connector • Missing or damaged connector seals. • Dirt or debris in or on the connector pins • Connector shell broken • Wire insulation damage • Damaged connector locking tab.	**Connector Dirty or Damaged?** **Yes** **Repair** Clean, repair or replace the connector.	Repair Complete
	Connector Dirty or Damaged? **No**	2A

STEP 2 Check Engine Speed Change Switch		
STEP 2A: Check Engine Speed Change Switch to Fuse Box F8 Wire		
Condition: - Key switch OFF - Remove fuse F8 from the fuse box. Refer to the Operator's Station Relays and Diodes procedure in the Compactor Repair section. - Disconnect the engine speed change switch to fuse box F8 wire at the engine speed change switch. Refer to the Engine Speed Change Switch procedure in the Compactor Repair section.		
Action	**Specifications / Repair**	**Next Step**
Check engine speed change switch to fuse box F8 wire: • Connect a jumper wire to the fuse box F8 wire at the engine speed change switch. • Connect the remaining jumper end to ground. • Place a multimeter test lead to fuse box F8 terminal that connects to the engine speed change switch. • Place the remaining multimeter test lead on ground.	**Less than 10 ohms?** **Yes**	2B
	Less than 10 ohms? **No** **Repair** Repair or replace the wiring harness.	Repair Complete

STEP 2B: Check Wire From Engine Speed Change Switch to Throttle Relay Coil		
Condition: - Key switch OFF - Disconnect the engine speed change switch to throttle relay wire at the engine speed change switch. Refer to the Engine Speed Change Switch Procedure in the Compactor Repair section. - Disconnect the throttle relay to engine speed change switch wire at the throttle relay. Refer to the Operator's Station Relays and Diode Procedure in the Compactor Repair section.		
Action	**Specifications / Repair**	**Next Step**
Check wire from engine speed change switch to throttle relay output contact: • Connect a jumper to the engine change switch coil wire at the throttle relay. • Connect the other end of the jumper to ground. • Place a multimeter test lead on the throttle relay coil wire at the engine speed switch. • Place the remaining multimeter test lead on ground.	**Less than 10 ohms?** **Yes**	2C1
	Less than 10 ohms? **No** **Repair** Replace the wire.	Repair Complete

STEP 2C: Check Engine Speed Switch Contacts		
Condition: - Key switch OFF. - Engine speed switch in the IDLE position. - Disconnect the engine speed change switch to throttle relay wire at the engine speed change switch. Refer to the Engine Speed Change Switch Procedure in the Compactor Repair section. - Disconnect the engine speed change switch wire to fuse box F8 wire at the engine speed change switch. Refer to the Engine Speed Change Switch Procedure in the Compactor Repair section.		
Action	**Specifications / Repair**	**Next Step**
Check Contacts 4 and 5: • Place a multimeter test lead on terminal 4 of the engine speed change switch. • Place the remaining multimeter test lead on terminal 5 of the engine change switch.	**Less than 10 ohms?** **Yes**	3A
	Less than 10 ohms? **No** **Repair** Replace the engine speed change switch. Refer to the Engine Speed Change Switch procedure in the Compactor Repair section.	Repair Complete

STEP 3: Check Power Circuit		
STEP 3A: Check Fuse Box to Alternator Wire		
Condition: - Key switch OFF - Disconnect the battery. Refer to the Engine Start Switch Procedure in the Compactor Repair section. - Disconnect the wire on the fuse box that connects to the alternator BAT connection. - Disconnect the wire on the alternator that connects to the fuse box. - Refer to the Wiring Diagram in this section for wire colors and connector pin location.		
Action	**Specifications / Repair**	**Next Step**
Check the fuse box to alternator wire: • Place one end of a jumper wire onto the wire that was removed from the alternator. • Place the other end of the jumper to ground. • Place a multimeter test lead onto the fuse box terminal that connects the alternator BAT wire. • Place the remaining multimeter test lead onto chassis ground.	**Less than 10 ohms?** **Yes**	3B
	Less than 10 ohms? **No** **Repair** Repair or replace the compactor harness.	Repair Complete

STEP 3B: Check the Alternator to Battery Relay Wire		
Condition: - Key switch OFF - Disconnect the battery. Refer to the Engine Start Switch Procedure in the Compactor Repair section. - Disconnect the wire on the alternator that connects to the battery relay. - Disconnect the wire on the battery relay that connects to the alternator. - Refer to the Wiring Diagram in this section for wire colors and connector pin location.		
Action	**Specifications / Repair**	**Next Step**
Check the alternator to battery relay wire: • Place one end of a jumper wire onto the wire that was removed from the alternator. • Place the other end of the jumper to ground. • Place a multimeter test lead onto the battery relay wire that connects to the alternator. • Place the remaining multimeter test lead onto chassis ground.	**Less than 10 ohms?** **Yes**	3C
	Less than 10 ohms? **No** **Repair** Repair or replace the compactor harness.	Repair Complete

STEP 3C: Check 75 Amp Fuse		
Condition: - Key switch OFF - Remove the 75 Amp fuse. Refer to the Fuses 65 Amp and above procedure in the Compactor Repair section. - Refer to the Wiring Diagram in this section for wire colors and connector pin location.		
Action	**Specifications / Repair**	**Next Step**
Check the 75 amp fuse: • Place a multimeter test lead on one leg of the fuse. • Place the remaining multimeter test lead on the other leg of the fuse.	**Less than 10 ohms?** **Yes** **Repair** Replace the fuse. Refer to the Fuses 65 Amp and Above procedure in the Compactor Repair section.	Repair Complete
	Less than 10 ohms? **No**	2B8

STEP 4: Check Throttle Relay		
STEP 4A: Check Throttle Relay Ground Wire		
Condition: - Key switch OFF - Disconnect the wire from throttle relay connector. Refer to the Operator's Station Relays and Diode procedure in the Compactor Repair section.		
Action	**Specifications / Repair**	**Next Step**
Check Throttle Relay Ground Wire: • Place a multimeter test lead on the throttle relay ground wire. • Place the remaining multimeter test lead on ground.	**Less than 10 ohms?** **Yes**	4B
	Less than 10 ohms? **No** **Repair** Repair or replace the wiring harness.	Repair Complete

STEP 4B: Test Throttle Relay.		
Condition: - Key switch OFF - Open access door on steering column and remove interlock relay. The throttle relay is located on the door. Refer to the Operator's Station Relays and Diode procedure in the Compactor Repair section. - Refer to the Wiring Diagram in this section for wire colors and connector pin location.		
Action	**Specifications / Repair**	**Next Step**
Check the fuse box to alternator wire: • Connect the supply lead from a 12 VDC power supply to pin (a) of the relay. • Connect the return lead from the 12 VDC power supply to pin (b) of the relay. • Place a multimeter test lead onto pin (e) of the relay. • Place the remaining multimeter test lead onto pin (c) of the relay.	**Less than 10 ohms?** **Yes** **Repair** Contact nearest Cummins® Authorized Repair Facility for failed ECM.	Repair Complete
	Less than 10 ohms? **No** **Repair** Replace the interlock relay. Refer to the Operator's Station Relays and Diode procedure in the Compactor Repair section.	Repair Complete

Compactor Will Not Move Forward and/or Reverse or Does Not Drive Correctly

Symptoms
The compactor will not move:

- Forward
- Reverse
- Forward or reverse

How to Use This Troubleshooting Procedure
This symptom tree can be used to troubleshoot a Compactor Will Not Move Forward and/or Reverse problem. Start by performing Step 1 troubleshooting. Step 1 will ask a series of questions and will provide a list of troubleshooting steps to be performed depending on the symptom.

Shop Talk
The compactor drive system is a hydraulic drive system. The compactor roller and rear wheels are both driven. The compactor roller is driven by a hydraulic motor. The compactor rear wheels are driven by a hydraulic motor that connects to the rear end.

The compactor steering pump provides supply hydraulic fluid to the propulsion pump after it has routed through the Orbitrol steering valve.

There is a three-pump assembly for the compactor hydraulic system:

- Propulsion – for movement of the compactor (1st pump from back of engine).
- Vibration – for drum vibration (pump mounted to propulsion pump)
- Steering – for compactor steering (pump mounted to vibration pump)

Troubleshooting Summary

STEP 1: Check Compactor
- STEP 1A: Check Hydraulic Oil Level
- STEP 1B: Check for Hydraulic Leaks
- STEP 1C: Check Unloader Valve

STEP 2: Check Directional Control Lever
- STEP 2A: Check Forward/Reverse Lever Cable Connection
- STEP 2B: Check Forward/Reverse Lever Cable Pump Connection
- STEP 2C: Verify Directional Control Lever Adjustment

STEP 3: Check Charge Pressure (Steering Pump)
- STEP 3A: Check Steering Function
- STEP 3B: Check Steering Pump Pressure

STEP 4: Check Propulsion Pump System
- STEP 4A: Check Propulsion Pump Pressure
- STEP 4B: Check Drive Motor Operation

STEP 1: Check Compactor		
STEP 1A: Check Hydraulic Oil Level		
Condition: - Key switch OFF.		
Action	**Specifications / Repair**	**Next Step**
Check hydraulic oil level at the hydraulic tank sight glass.	**Hydraulic Oil Level Low?** **Yes** **Repair** Fill the hydraulic tank to proper level. .	1B
	Hydraulic Oil Level Low? **No**	2A

STEP 1B: Check for Hydraulic Leaks		
Condition: - Start engine.		
Action	**Specifications / Repair**	**Next Step**
Check for hydraulic leaks: • Check all propulsion hoses • Check roller drive motor • Check rear end.	**Hydraulic leaks?** **Yes** Repair hydraulic leak.	Repair Complete
	Hydraulic leaks? **No**	1C

STEP 1C: Check Unloader Valve		
Condition: - Gain access to the unloader valve. Refer to the Operating Systems procedure in the Operation section.		
Action	**Specifications / Repair**	**Next Step**
Make sure the unloader valve is completely closed.	**Unloader Valve Closed?** **Yes** Repair hydraulic leak.	Repair Complete
	Unloader Valve Closed? **No**	2A

STEP 2 Check Directional Control Lever		
STEP 2A: Check Forward/Reverse Lever Cable Connection		
Condition: - Key switch OFF - Remove the directional control lever cover. Refer to the Directional Control Lever procedure in the Compactor Repair section.		
Action	**Specifications / Repair**	**Next Step**
Check the forward/reverse lever Cable connection.	**Cable connected?** **Yes** .	2B
	Cable connected? **No** **Repair** Connect the directional control lever. Refer to the Directional Control Lever procedure in the Compactor Repair Section.	2C

STEP 2B: Check Forward/Reverse Lever Cable Pump Connection		
Condition: - Key switch OFF. - Open hood.		
Action	**Specifications / Repair**	**Next Step**
Check forward/reverse lever cable pump connection:	**Cable Connected?** **Yes**	2C
	Cable Connected? **No** **Repair** Connect and adjust cable. Forward/Reverse Cable Adjustment procedure in the Testing and Adjustment section.	Repair Complete

STEP 2C: Verify Directional Control Lever Adjustment		
Condition: - Key switch OFF. - Place forward/reverse lever in the neutral position.		
Action	**Specifications / Repair**	**Next Step**
Verify the directional control lever adjustment. Refer to the Forward/Reverse Cable Adjustment procedure in the Testing and Adjustment section.	**Cable adjusted correctly?** **Yes**	3A
	Less than 10 ohms? **No** **Repair** Adjust the cable correctly. Refer to the Forward/Reverse Cable Adjustment procedure in the Testing and Adjustment Section.	Repair Complete

STEP 3: Check Charge Pressure (Steering Pump)		
STEP 3A: Check Steering Operation		
Condition: - Engine running.		
Action	**Specifications / Repair**	**Next Step**
Turn the steering wheel.	**Does compactor steering work?** **Yes**	3B
	Does compactor steering work? **No** **Repair** The compactor steering pump supplies input to the propulsion pump. Troubleshoot the compactor steering circuit. Refer to the Compactor Steering Malfunction symptom tree in this section.	Repair Complete

STEP 3B: Check Steering Pump Pressure		
Condition: - Engine running in FULL. - Parking brake set.		
Action	**Specifications / Repair**	**Next Step**
Check the steering pump pressure. Refer to the Measure Steering Pump Pressure procedure in the Hydraulic Pump Testing section.	**Steering pump pressure correct?** **Yes**	4A
	Steering pump pressure correct? **No** **Repair** Replace the check valve or steering pump. Refer to the Steering Pump Pressure in the Hydraulic Pump Testing section.	Repair Complete

STEP 4: Check Propulsion System		
STEP 4A: Check Propulsion Pump Pressure		
Condition: - Engine running in FULL. - Parking brake set.		
Action	**Specifications / Repair**	**Next Step**
Check propulsion pump pressure. Refer to Measure Hydraulic Pressure Main Propulsion Circuit procedure in the Testing and Adjustment section. .	**Propulsion pump pressure correct?** **Yes**	4B
	Propulsion pump pressure correct? **No** **Repair** Replace the propulsion pump. Refer to the Engine and Pump Assembly procedure in the Compactor Repair section.	Repair Complete

STEP 4B: Check Drive Motor Operation		
Condition: - Disconnect and cap off the roller drive motor hoses. Refer to the Roller procedure in the Compactor Repair section. - Engine running in FULL. - Parking brake set.		
Action	**Specifications / Repair**	**Next Step**
Check propulsion pump pressure. Refer to Measure Hydraulic Pressure Main Propulsion Circuit procedure in the Testing and Adjustment section.	**Pressure Correct?** **Yes** **Repair** Replace the roller drive motor. Refer to the Roller procedure in the Compactor Repair Section.	Repair Complete
	Pressure Correct? **No** Replace the rubber tire drive motor. Refer to the Rear End procedure in the Compactor Repair section.	Repair Complete

Parking Brake Does Not Work

WARNING

To reduce the possibility of personal injury and equipment damage, make sure the compactor is on level ground and the drive wheels are chocked.

Symptoms
The compactor parking brake will not engage or disengage.

How to Use This Troubleshooting Procedure
This symptom tree can be used to troubleshoot a Parking Brake Does Not Work Problem. Start by performing Step 1 troubleshooting. Step 1 will ask a series of questions and will provide a list of troubleshooting steps to be performed depending on the symptom.

Shop Talk
The parking brake circuit consists of the:

- Parking brake switch – Activates and deactivates parking brake .
- Foot Brake Switch – Activates and deactivates parking brake when brake pedal depressed and released.
- Parking brake solenoid – Sends hydraulic signal to parking brake when a signal is received from the parking brake switch or brake micro-switch.

When the brake pedal is depressed the normally closed brake micro-switch is opened. This causes the solenoid to shift and the parking brake is applied.

When the parking brake is applied:

- The contacts of the parking brake switch are open preventing signal to be sent to the parking brake solenoid.
- The solenoid does not allow oil to be routed to the brake assemblies. This allows the discs and plates to move together and the parking brake is set.

When the parking brake is released:

- The contacts of the parking brake switch are closed allowing signal to be sent to the solenoid. The contacts close.
- The solenoid shifts and hydraulic oil is supplied to the brake valve. This compresses the springs and the parking brake is released.

Troubleshooting Summary

STEP 1: Check Power Circuit
- STEP 1A: Check Fuse Box Fuse
- STEP 1B: Check Wire From Fuse Box to Foot Brake Switch Wire
- STEP 1C: Check Fuse Box to Alternator Wire
- STEP 1D: Check Alternator to Battery Relay Wire
- STEP 1E: Check 75 Amp Fuse

STEP 2: Check Foot Brake Switch
- STEP 2A: Check Foot Brake Switch Adjustment
- STEP 2B: Check Foot Brake Switch to Parking Brake Switch Wire
- STEP 2C: Check Foot Brake Switch Contacts

STEP 3: Check Parking Brake Switch and Solenoid
- STEP 3A: Check Parking Brake Switch to Parking Brake Solenoid Wire
- STEP 3B: Check Parking Brake Solenoid to Ground Wire.
- STEP 3C: Check Parking Brake Switch Contacts
- STEP 3D: Check Parking Brake Solenoid Operation

STEP 1: Check Power Circuit		
STEP 1A: Check Fuse Box Fuse		
Condition: - Key switch OFF - Open access door on steering column. The fuse box is located on the door. Refer to the Operator's Station Relays and Diode procedure in the Compactor Repair section for fuses box location. - Remove fuse box fuse (F9). - Refer to the Wiring Diagram in this section for wire colors and connector pin location.		
Action	**Specifications / Repair**	**Next Step**
Check fuse box fuse (F9): • Place a multimeter test lead on one leg of the fuse. • Place the remaining multimeter test lead on the other leg of the fuse.	**Less than 10 ohms?** **Yes** .	1B
	Less than 10 ohms? **No** **Repair** Replace the fuse.	Repair Complete

STEP 1B: Check Wire From Fuse Box to Foot Brake Switch Wire		
Condition: - Key switch OFF - Open access door on steering column. The fuse box is located on the door. Refer to the Operator's Station Relays and Diode procedure in the Compactor Repair section for fuses box location. - Remove fuse box fuse (F9). - Disconnect the fuse box to foot brake switch wire from parking brake switch. Refer to the Parking Brake Button procedure in the Compactor Repair section. - Refer to the Wiring Diagram in this section for wire colors and connector pin location.		
Action	**Specifications / Repair**	**Next Step**
Check wire from fuse box to control box: • Connect one end of a jumper onto foot brake switch wire that connects to the fuse box terminal (F9). • Connect the remaining end of the jumper to ground. • Place a multimeter test lead on fuse box terminal that supplies the foot brake switch. • Place the remaining multimeter test lead onto chassis ground.	**Less than 10 ohms?** **Yes**	1C
	Less than 10 ohms? **No** **Repair** Repair or replace the compactor harness.	Repair Complete

STEP 1C: Check Fuse Box to Alternator Wire		
Condition: - Key switch OFF - Disconnect the battery. Refer to the Engine Start Switch Procedure in the Compactor Repair section. - Disconnect the wire on the fuse box that connects to the alternator BAT connection. - Disconnect the wire on the alternator that connects to the fuse box. - Refer to the Wiring Diagram in this section for wire colors and connector pin location.		
Action	**Specifications / Repair**	**Next Step**
Check the fuse box to alternator wire: • Place one end of a jumper wire onto the wire that was removed from the alternator. • Place the other end of the jumper to ground. • Place a multimeter test lead onto the fuse box terminal that connects the alternator BAT wire. • Place the remaining multimeter test lead onto chassis ground.	**Less than 10 ohms?** **Yes**	1D
	Less than 10 ohms? **No** **Repair** Repair or replace the compactor harness.	Repair Complete

STEP 1D: Check the Alternator to Battery Relay Wire		
Condition: - Key switch OFF - Disconnect the battery. Refer to the Engine Start Switch Procedure in the Compactor Repair section. - Disconnect the wire on the alternator that connects to the battery relay. - Disconnect the wire on the battery relay that connects to the alternator. - Refer to the Wiring Diagram in this section for wire colors and connector pin location.		
Action	**Specifications / Repair**	**Next Step**
Check the alternator to battery relay wire: • Place one end of a jumper wire onto the wire that was removed from the alternator. • Place the other end of the jumper to ground. • Place a multimeter test lead onto the battery relay wire that connects to the alternator. • Place the remaining multimeter test lead onto chassis ground.	**Less than 10 ohms?** **Yes**	1E
	Less than 10 ohms? **No** **Repair** Repair or replace the compactor harness.	Repair Complete

STEP 1E: Check 75 Amp Fuse		
Condition: - Key switch OFF - Remove the 75 Amp fuse. Refer to the Fuses 65 Amp and Above procedure in the Compactor Repair section. - Refer to the Wiring Diagram in this section for wire colors and connector pin location.		
Action	**Specifications / Repair**	**Next Step**
Check the 75 amp fuse: • Place a multimeter test lead on one leg of the fuse. • Place the remaining multimeter test lead on the other leg of the fuse.	**Less than 10 ohms?** **Yes** **Repair** Replace the fuse. Refer to the Fuses 65 Amp and Above Procedure in the Compactor Repair section.	Repair Complete
	Less than 10 ohms? **No**	2A

STEP 2: Check Foot Brake Switch		
STEP 2A: Check Foot Brake Switch Adjustment		
Condition: - Key switch OFF - Gain access to the foot brake switch. Refer to the Foot Brake Switch procedure in the Compactor Repair section.		
Action	**Specifications / Repair**	**Next Step**
Check foot brake switch adjustment: • Depress the brake pedal. • Adjust the mounting nuts on the switch so the plunger is completely released position. • Release the brake pedal. Make sure plunger is fully depressed.	**Foot brake switch adjusted?** **Yes**	2B
	Foot brake switch adjusted? **No** **Repair** Adjust foot brake switch.	Repair Complete

STEP 2B: Check Foot Brake Switch to Parking Brake Switch Wire		
Condition: - Key switch OFF - Disconnect the foot brake switch wire that connects to the parking brake. Refer to the Foot Brake procedure in the Compactor Repair Section. - Disconnect parking brake switch wire that connects to the foot brake switch. Refer to the Parking Brake Button procedure in the Compactor Repair section. - Refer to the Wiring Diagram in this section for wire colors and connector pin location.		
Action	**Specifications / Repair**	**Next Step**
Check foot brake switch to parking brake switch wire: • Place one end of a jumper wire onto the wire that was removed from the parking brake switch. • Place the other end of the jumper to ground. • Place a multimeter test lead onto the wire that was removed from the foot brake switch. • Place the remaining multimeter test lead onto chassis ground.	**Less than 10 ohms?** **Yes**	2C
	Less than 10 ohms? **No** **Repair** Repair or replace the compactor harness.	Repair Complete

STEP 2C: Check the Foot Brake Switch Contacts		
Condition: - Key switch OFF - Remove the wires from the foot brake switch. Refer to the Foot Brake Switch procedure in the Compactor Repair Section.		
Action	**Specifications / Repair**	**Next Step**
Check the foot brake switch contacts: • Place a multimeter test lead on COM terminal of the foot brake switch. • Place the remaining multimeter test lead on the NO terminal of the foot brake switch.	**Less than 10 ohms?** **Yes**	3A
	Less than 10 ohms? **No** **Repair** Replace the neutral safety switch. Refer to the Foot Brake procedure in the Compactor Repair section.	Repair Complete

STEP 3: Check Parking Brake Switch and Solenoid		
STEP 3A: Check Parking Brake Switch to Parking Brake Solenoid Wire		
Condition: - Key switch OFF - Disconnect parking brake switch wire that connects to the parking brake solenoid wire. Refer to the Parking Brake Button procedure in the Compactor Repair section. - Disconnect parking brake solenoid wire that connects to the parking brake switch. Refer to the Parking Brake Solenoid procedure in the Compactor Repair section.		
Action	**Specifications / Repair**	**Next Step**
Check parking brake switch to parking brake solenoid wire: • Connect one end of a jumper to the parking brake solenoid wire at the parking brake switch. • Connect the remaining end to chassis ground. • Place a multimeter test lead on the parking brake switch wire at the parking brake solenoid. • Place the remaining multimeter test lead on chassis ground.	**Less than 10 ohms?** **Yes**	3B
	Less than 10 ohms? **No** **Repair** Repair or replace the harness.	Repair Complete

STEP 3B: Check Parking Brake Solenoid to Ground Wire		
Condition: - Key switch OFF - Remove the ground wire from the parking brake solenoid. Refer to the Parking Brake Solenoid procedure in the Compactor Repair section.		
Action	**Specifications / Repair**	**Next Step**
Check the parking brake solenoid to ground wire: • Place a multimeter test lead on the ground wire from the parking brake solenoid. • Place the remaining multimeter test lead on ground.	**Less than 10 ohms?** **Yes**	3C
	Less than 10 ohms? **No** **Repair** Repair or replace the harness.	Repair Complete

STEP 3C: Check the Parking Brake Switch Contacts		
Condition: - Key switch OFF - Remove the wires from the parking braking button. Refer to the Parking Brake Button procedure in the Compactor Repair section.		
Action	**Specifications / Repair**	**Next Step**
Check parking brake switch contacts: • Place a multimeter test lead on terminal 1 of the parking brake switch. • Place the remaining multimeter test lead on terminal 3 of the parking brake switch. • Press the parking brake button.	**Less than 10 ohms?** **Yes**	3E
	Less than 10 ohms? **No** **Repair** Replace the parking brake button. Refer to the Parking Brake Button procedure in the Compactor Repair section.	Repair Complete

STEP 3D: Check Parking Brake Solenoid Operation		
Condition: - Key switch to OFF position. - Remove parking brake solenoid. Refer to the Parking Brake Solenoid procedure in the Compactor Repair section.		
Action	**Specifications / Repair**	**Next Step**
Check parking brake solenoid operation: • Connect a ground wire to the solenoid. • Connect a 12 VDC power supply to the input side terminal of the solenoid. Solenoid will shift if working correctly.	**Solenoid shifted?** **Yes** **Repair** Contact Sakai America for authorization to replace the brakes.	Repair Complete
	Solenoid Shifted? **No** **Repair** Replace the Solenoid. Refer to the Parking Brake Solenoid procedure in the Compactor Repair section.	Repair Complete

Compactor Will Not Change Speeds

Symptoms
The compactor will not change from speeds when the speed change switch is moved from the turtle to rabbit or rabbit icons.

How to Use This Troubleshooting Procedure
This symptom tree can be used to troubleshoot a Compactor will not change speeds problem. Start by performing Step 1 troubleshooting. Step 1 will ask a series of questions and will provide a list of troubleshooting steps to be performed depending on the symptom.

Shop Talk
The compactor travel speed is changed when the compactor speed change switch transmits a signal to the compactor speed solenoid. The solenoid shifts and will remain in the maximum speed position until the signal is lost from the switch.

Troubleshooting Summary

STEP 1: Check Compactor
- STEP 1A: Check Hydraulic Oil Level
- STEP 1B: Check for Hydraulic Leaks

STEP 2: Check Engine Speed Change Switch
- STEP 2A: Check Speed Change Switch to Fuse Box F5 Wire
- STEP 2B: Check Engine Speed Switch Contacts
- STEP 2C: Check Fuse Box to Alternator Wire
- STEP 2D: Check Alternator to Battery Relay Wire
- STEP 2E: Check 75 Amp Fuse

STEP 5: Check Speed Change Solenoid
- STEP 5A: Check Solenoid to Speed Change Wire
- STEP 5B: Check Solenoid to Chassis Ground Wire
- STEP 5C: Check Speed Change Solenoid Operation

STEP 1: Check Compactor		
STEP 1A: Check Hydraulic Oil Level		
Condition: - Key switch OFF		
Action	**Specifications / Repair**	**Next Step**
Check hydraulic oil level at the hydraulic tank sight glass.	**Hydraulic Oil Level Low?** **Yes** **Repair** Fill the hydraulic tank to proper level. .	1B
	Hydraulic Oil Level Low? **No**	2A

STEP 1B: Check for Hydraulic Leaks		
Condition: - Start engine		
Action	**Specifications / Repair**	**Next Step**
Check for hydraulic leaks: • Check all propulsion hoses • Check roller drive motor • Check rear end.	**Hydraulic leaks?** **Yes** Repair hydraulic leak.	Repair Complete
	Hydraulic leaks? **No**	1C

STEP 2: Check Speed Change Switch		
STEP 2A: Check Speed Change Switch to Fuse Box F5 Wire		
Condition: - Key switch to OFF position. - Remove fuse F5 to the speed change switch. Refer to the Relays and Diode procedure in the Compactor Repair Procedure. - Disconnect the speed switch to fuse box F5 wire at the engine speed change switch. Refer to the Engine Speed Change Switch procedure in the Compactor Repair section. - Disconnect the engine speed change wire at the fuse box F8 connection.		
Action	**Specifications / Repair**	**Next Step**
Check the speed change switch to fuse box F5 wire: • Connect one end of a jumper on wire that routes to the fuse box F8 fuse at the speed change switch. • Connect the other end of the jumper to ground. • Place a multimeter test lead on the fuse box at the F5 to speed switch terminal. • Place the remaining multimeter test lead on ground. .	**Less than 10 ohms?** **Yes**	2B
	Less than 10 ohms? **No** **Repair** Repair or replace the wiring harness.	Repair Complete

STEP 2B: Check Speed Change Switch Contacts		
Condition: - Key switch OFF - Disconnect the speed change switch to solenoid wire at the speed change switch. Refer to the Vibratory Control Panel Switches procedure in the Compactor Repair section. - Disconnect the engine speed change switch wire to fuse box F5 wire at the engine speed change switch. Refer to the Engine Speed Change Switch Procedure in the Compactor Repair section.		
Action	**Specifications / Repair**	**Next Step**
Check Contacts 1 and 2: • Place a multimeter test lead on terminal 1of the speed change switch. • Place the remaining multimeter test lead on terminal 2 of the speed change switch.	**Less than 10 ohms?** **Yes** .	2C
	Less than 10 ohms? **No** **Repair** Replace the speed change switch. Refer to the Vibratory Control Panel Switches procedure in the Compactor Repair section.	Repair Complete

STEP 2C: Check Fuse Box to Alternator Wire		
Condition: - Key switch OFF - Disconnect the battery. Refer to the Engine Start Switch Procedure in the Compactor Repair section. - Disconnect the wire on the fuse box that connects to the alternator BAT connection. - Disconnect the wire on the alternator that connects to the fuse box. - Refer to the Wiring Diagram in this section for wire colors and connector pin location.		
Action	**Specifications / Repair**	**Next Step**
Check the fuse box to alternator wire.: • Place one end of a jumper wire onto the wire that was removed from the alternator. • Place the other end of the jumper to ground. • Place a multimeter test lead onto the fuse box terminal that connects the alternator BAT wire. • Place the remaining multimeter test lead onto chassis ground.	**Less than 10 ohms?** **Yes**	2D
	Less than 10 ohms? **No** **Repair** Repair or replace the compactor harness.	Repair Complete

STEP 2D: Check the Alternator to Battery Relay Wire		
Condition: - Key switch OFF - Disconnect the battery. Refer to the Engine Start Switch Procedure in the Compactor Repair section. - Disconnect the wire on the alternator that connects to the battery relay. - Disconnect the wire on the battery relay that connects to the alternator. - Refer to the Wiring Diagram in this section for wire colors and connector pin location.		
Action	**Specifications / Repair**	**Next Step**
Check the alternator to battery relay wire: • Place one end of a jumper wire onto the wire that was removed from the alternator. • Place the other end of the jumper to ground. • Place a multimeter test lead onto the battery relay wire that connects to the alternator. • Place the remaining multimeter test lead onto chassis ground.	**Less than 10 ohms?** **Yes**	2E
	Less than 10 ohms? **No** **Repair** Repair or replace the compactor harness.	Repair Complete

STEP 2E: Check 75 Amp Fuse		
Condition: - Key switch OFF - Remove the 75 Amp fuse. Refer to the Fuses 65 Amp and Above procedure in the Compactor Repair section. - Refer to the Wiring Diagram in this section for wire colors and connector pin location.		
Action	**Specifications / Repair**	**Next Step**
Check the 75 amp fuse: • Place a multimeter test lead on one leg of the fuse. • Place the remaining multimeter test lead on the other leg of the fuse.	**Less than 10 ohms?** **Yes** **Repair** Replace the fuse. Refer to the Fuse 65 Amp and Above procedure in the Compactor Repair section.	Repair Complete
	Less than 10 ohms? **No**	3A

STEP 5: Check Speed Change Solenoid		
STEP 5A: Check Solenoid to Speed Change Switch Wire		
Condition: - Key switch to OFF position. - Disconnect the speed change switch wire to the solenoid at the solenoid. Refer to the Compactor Speed Solenoid procedure in the Compactor Repair Section. - Disconnect the solenoid wire at the speed change switch. Refer to the Vibratory Control Panel Switches procedure in the Compactor Repair section.		
Action	**Specifications / Repair**	**Next Step**
Check solenoid to speed change switch wire: • Connect a jumper wire to the speed change wire at the solenoid. • Connect the remaining end of the jumper to chassis ground. • Place a multimeter test lead on the solenoid wire at the speed change switch. • Place the remaining multimeter test lead on chassis ground.	**Less than 10 ohms?** **Yes**	5B
	Solenoid Shifted? **No** **Repair** Repair or replace the harness.	Repair Complete

STEP 5B: Check Solenoid to Chassis Ground Wire		
Condition: - Key switch to OFF position. - Disconnect the chassis ground wire for the solenoid from the solenoid. Refer to the Compactor Speed Solenoid procedure in the Compactor Repair Section. - Disconnect the solenoid wire at the speed change switch. Refer to the Vibratory Control Panel Switches procedure in the Compactor Repair section.		
Action	**Specifications / Repair**	**Next Step**
Check solenoid to speed change switch wire: • Place a multimeter test lead on the solenoid wire at the solenoid. • Place the remaining multimeter test lead on chassis ground.	**Less than 10 ohms?** **Yes**	5C
	Solenoid Shifted? **No** **Repair** Repair or replace the harness.	Repair Complete

STEP 5C: Check Speed Change Solenoid Operation		
Condition: - Key switch to OFF position. - Remove solenoid. Refer to the Compactor Speed Solenoid procedure in the Compactor Repair section.		
Action	**Specifications / Repair**	**Next Step**
Check speed change solenoid operation: • Connect a ground wire to the solenoid. • Connect a 12 VDC power supply to the LOW side terminal of the terminal. Solenoid will shift from low to high if working correctly.	**Solenoid shifted?** **Yes** **Repair** Refer to the Compactor Will Not Move Forward and/or Reverse or Does Not Move Correctly troubleshooting tree in this section.	Repair Complete
	Solenoid Shifted? **No** **Repair** Replace the Solenoid. Refer to the Compactor Speed Solenoid procedure in the Compactor Repair section.	Repair Complete

Compactor Repair

This procedure describes the disassembly for the SV505 Compactor. Make sure all tag out/lock out and safety procedures are followed. The Operation section must be read and understood prior to beginning this procedure.

DANGER

To reduce the possibility of personal injury and equipment damage, adhere to all safety warnings in this manual. Understand the General Safety Instructions procedure prior to beginning repair.

WARNING

To reduce the possibility of personal injury and equipment damage, park the compactor on level ground, engage parking brake, set safety pins and chock the wheels prior to repair.

WARNING

To reduce the possibility of personal injury and equipment damage, do not allow unauthorized personal in the work area and use pre-determined hand signals to communicate with team mates.

WARNING

Understand the functions of the controls and gauges. Familiarize yourself with their location and operation. Understand the meaning of all symbols.

WARNING

To reduce the possibility of personal injury, make sure all hot surfaces on the compactor have cooled off sufficiently prior to removal and/or installation of components.

WARNING

To reduce the possibility of personal injury, make sure power is secured to the compactor by disconnecting the batteries prior to beginning any repair.

DANGER

The lifting equipment must be rated to lift the component, assembly or compactor. Failure to use properly rated lifting equipment can cause personal injury, death or equipment damage.

Roller **Remove** **WARNING** **To reduce the possibility of personal injury and equipment damage, park the compactor on level ground, engage parking brake, set safety pins and chock the wheels prior to repair.** Install the safety bar.		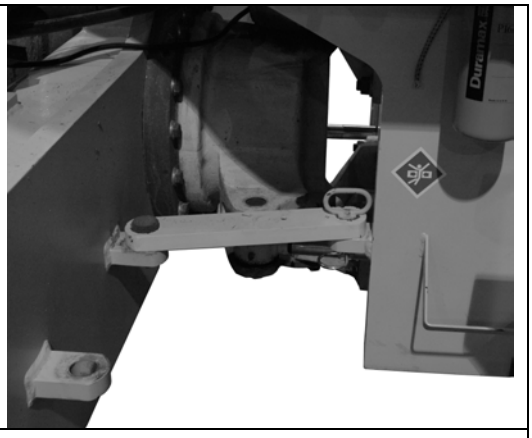

Place a hydraulic jack, with wooden blocks under each side of the front frame. Raise the front frame until the rubber isolators are relaxed. Repeat the process for the remaining side of the front frame.		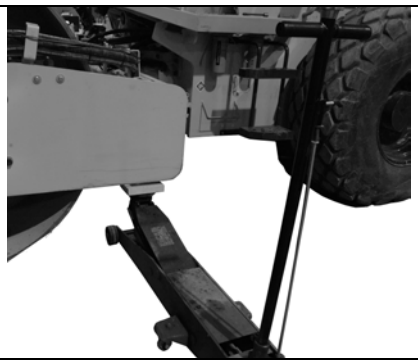
WARNING **Hydraulic fluid is under pressure. To reduce the possibility of personal injury, make sure the hydraulic system is not under pressure prior to removing hoses.** Remove the hydraulic drive motor hose collar bolts. Remove the collars and hose. Repeat the process for the vibratory motor, located on the other side of the roller.		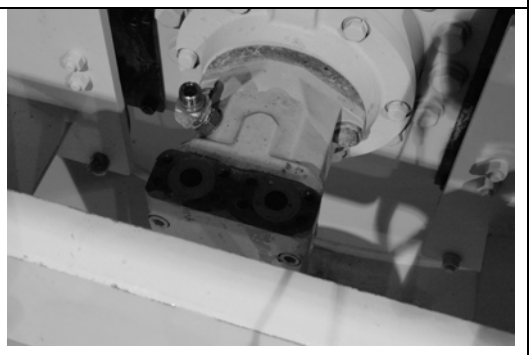
Place a bucket under the vibratory and propulsion motor to allow hydraulic oil to drain.		
WARNING **This component requires a hoist to move. To reduce the possibility of personal injury, always use the lifting equipment that has proper capacity.** Attach a lifting device to the scraper bar.		

Remove the scraper bar mounting bolts and nuts from the right side of the front frame. Remove the scraper bar mounting bolts and nuts from the left side of the front frame.		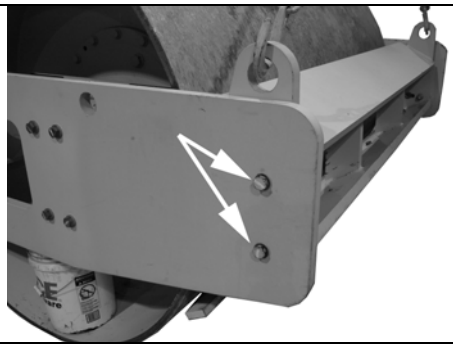
⚠ WARNING **This component requires a hoist to move. To reduce the possibility of personal injury, always use the lifting equipment that has proper capacity.** Slide the scraper out of the front frame.		
Remove the propulsion motor side drum support bolts.		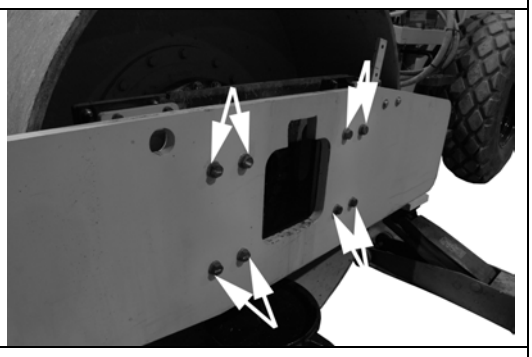
Remove the vibration motor side drum support bolts.		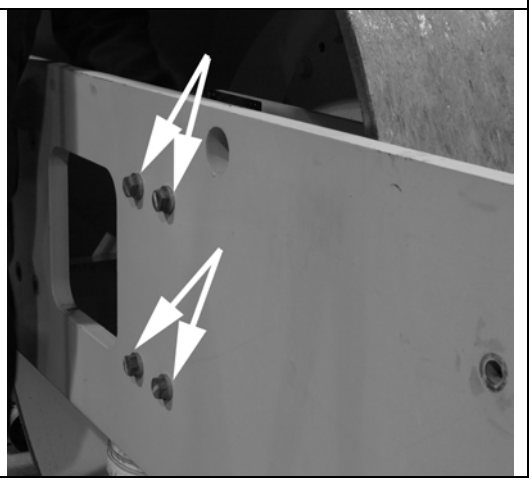

Remove the bolts and nuts for the hydraulic hose brackets on both sides of the compactor.		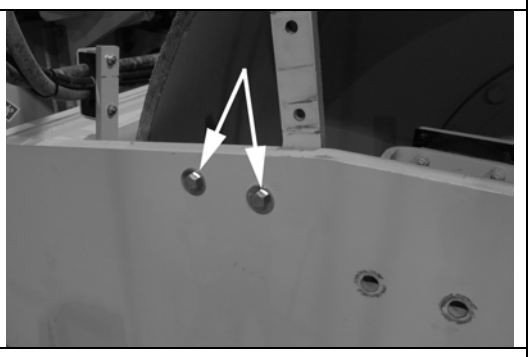
WARNING **To reduce the possibility of personal injury, station personnel at both sides of the roller with chocks to stop roller movement.** Roll the compactor roller out of the front frame.		
Disassemble ***Vibratory Motor Side*** Remove the bolts for the vibratory motor. Remove the vibratory motor. **Note: Blocks will be required to stand the drum on the propulsion motor side of the roller**.		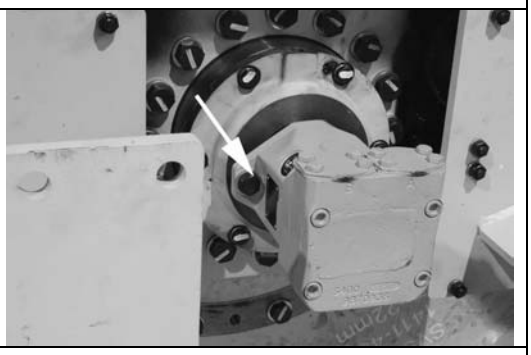
The vibratory motor has an extension shaft. The extension shaft connects the motor with the vibrator shaft. The extension shaft is machined with splines on each end. Slide the extension shaft off of the motor shaft.		

The roller is attached to the front frame with plate assemblies located on each side of the roller. The plate assembly consists of a base plate, rubber dampers and holders. Remove the bolts that attach the plate assembly to the roller. Remove the plate assembly.		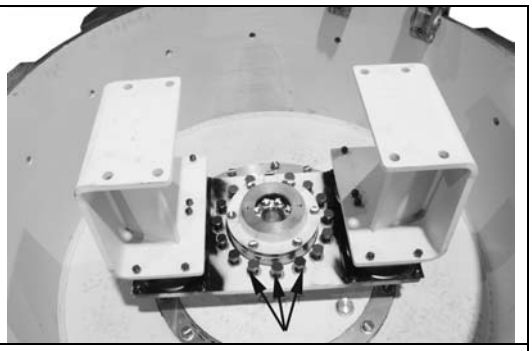
To disassemble the damper and plate assembly: • The holders are attached to the dampers with bolts, nuts and washers. • Remove the bolts, nuts and washers from the holders and remove the holders. The logo is positioned up on the dampers.		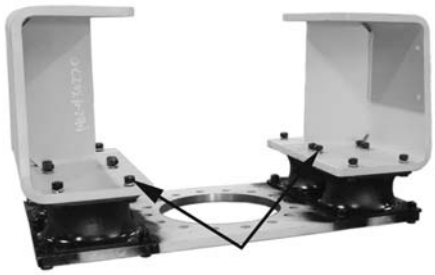
There are four individual rubber dampers attached to the base plate. Remove the bolts, nuts and washers from the dampers. Remove the dampers.		
The vibrator motor is attached to the axel. Remove the axel mounting bolts from the roller. **Note: Pusher bolt holes are available.**		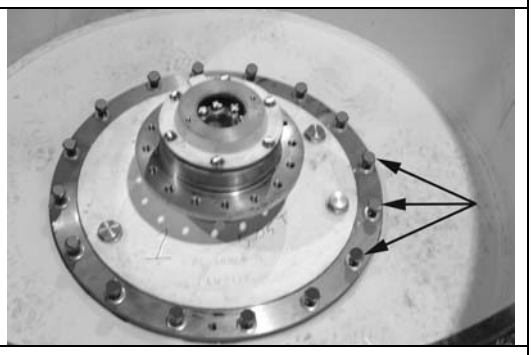

WARNING **This component requires a hoist to move. To reduce the possibility of personal injury, always use the lifting equipment that has proper capacity**. Attach a lifting device to the axel. Lift the axel off of the vibrator shaft and out of the roller.		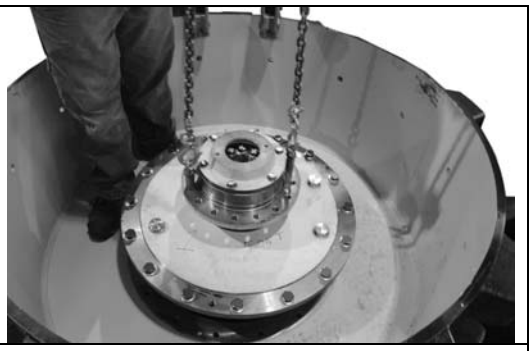
WARNING **Some state and federal agencies have determined that used oil can be carcinogenic and cause reproductive toxicity. Avoid inhalation of vapors, ingestion, and prolonged contact with used oil. If not reused, dispose of in accordance with local environmental regulations.** The roller contains approximately 35 liters (9.2 gallons) of oil. The oil must be drained prior to flipping the drum. Drain the oil.		
WARNING **This component requires a hoist to move. To reduce the possibility of personal injury, always use the lifting equipment that has proper capacity**. Attach a lifting device to the vibratory shaft. Lift the shaft up and out of the roller.		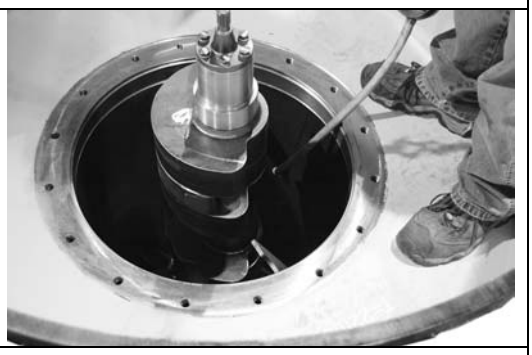
Remove the bearing cover bolts and washers. Remove the bearing cover.		

Remove the bearing retainer bolts and washers. Remove the bearing retainer.		
Vibratory shaft end play is adjusted with shims. Remove the shims. Save the shim pack for the assembly of the roller.		
A puller can be required to remove the axel shaft house bearing. Remove the axel shaft housing bearing.		
Remove the axel shaft bearing housing from the axel shaft.		

WARNING **To reduce the possibility of personal injury, wear eye protection when performing this step.** **Caution** **Make sure the housing surface is not damaged when removing the seal. If the housing surface is damaged, premature bearing wear can result because of a seal malfunction.** **Note: Only perform this step if bearings and races are to be replaced.** Remove the seal from the axel drive housing bearing cover.		
WARNING **To reduce the possibility of personal injury, wear eye protection when performing this step.** **Caution** **Make sure the housing surface is not damaged when removing the seal. If the housing surface is damaged, premature bearing wear can result because of a seal malfunction.** **Note: Only perform this step if bearings and races are to be replaced.** Remove the seal from the axel drive bearing housing.		
WARNING **To reduce the possibility of personal injury, wear eye protection when performing this step.** **Caution** **To reduce the possibility of premature bearing wear and equipment damage always replace the bearing and the outside race as a matched set.** **Note: Only perform this step if bearings and races are to be replaced** Remove the outside bearing race from the axel drive bearing housing.		

WARNING **To reduce the possibility of personal injury, wear eye protection when performing this step.** **Caution** **To reduce the possibility of premature bearing wear and equipment damage always replace the bearing and the outside race as a matched set.** **Note: Only perform this step if bearings and races are to be replaced.** Turn the axel drive bearing housing over. Remove the outside bearing race from the axel drive housing.		
Remove the o-ring from the axel shaft housing.		
Drive Motor Side The drum can be lifted by use of a plate-lifting device. The factory utilizes two 3-ton plate-lifting devices to lift the roller.		
WARNING **This component requires a hoist to move. To reduce the possibility of personal injury, always use the lifting equipment that has proper capacity**. Attach a lifting device and turn the roller over. The motor side must be positioned up.		

Remove the bolts that attach the plate assembly to the drive motor. Remove the plate assembly.		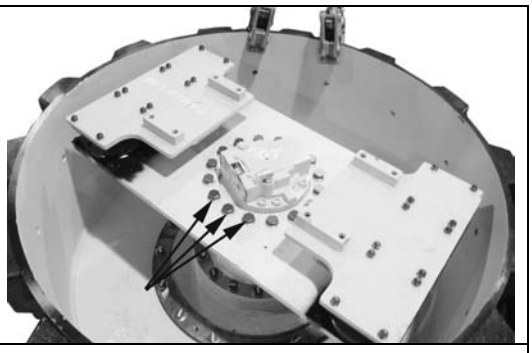
Remove the bolts, nuts and washers from the holders. Remove the holders.		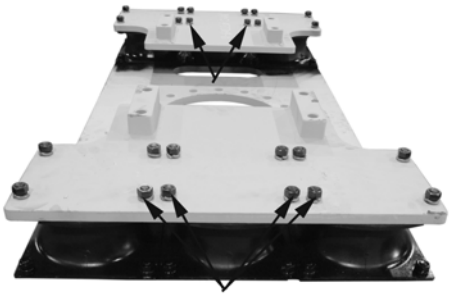
Remove the bolts, nuts and washers from the dampers. Remove the dampers.		
Remove the axel housing mounting bolts.		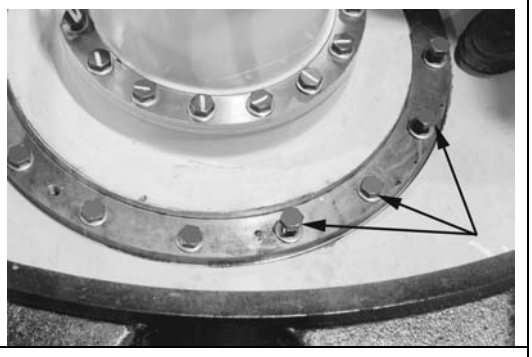

WARNING **This component requires a hoist to move. To reduce the possibility of personal injury, always use the lifting equipment that has proper capacity**. Attach a lifting device. Lift the hydraulic drive motor and axel shaft assembly off of the roller.		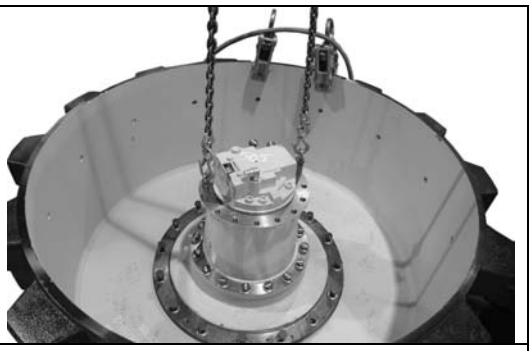
Loosen the drive motor bolts. Do not remove the bolts.		
WARNING **This component requires a hoist to move. To reduce the possibility of personal injury, always use the lifting equipment that has proper capacity**. Attach a lifting device. Remove the drive motor bolts. Lift the drive motor off of the vibrator shaft housing.		
Remove the o-ring from the drive motor.		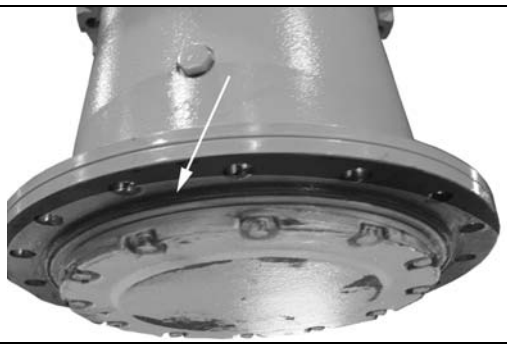

WARNING **To reduce the possibility of personal injury, wear eye protection when performing this step.** **Note: Only perform this step if bearings and races are to be replaced.** Use an inside bearing puller to remove the axel shaft housing bearing.		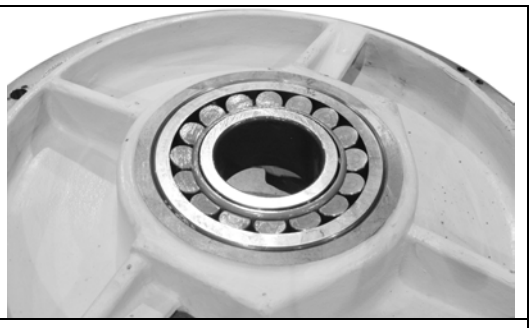
Remove the axel shaft housing o-ring.		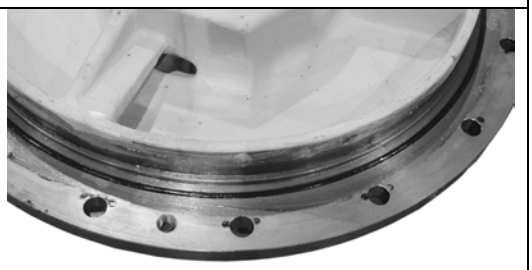
Clean and Inspect for Reuse **WARNING** **When cleaning with solvents, acids, or alkaline materials, follow the manufacturer's recommendations for use. Wear goggles and protective clothing to reduce the possibility of personal injury.** **WARNING** **To reduce the possibility of personal injury, wear eye and face protection when using compressed air.** **Caution** **When using compressed air to spin the bearing while drying. Spinning the bearing while drying can cause personal injury and bearing damage.** Clean all bearings, races and housing with solvent. Dry with compressed air.		

Note: Bearing shown disassembled to illustrate check. Do not disassemble bearing unless bearing is to be discarded. Inspect the bearings and races for the following: 1. Grooving – Caused by large particle contamination imbedding into soft cage material. 2. Abrasive Wear – Caused by fine abrasive particle contamination. 3. Bruising – Caused by debris from other fatigued parts, inadequate sealing or poor maintenance. If any bearing or race exhibits any one of the above listed conditions, it must be replaced. It is a good maintenance practice to replace all bearings and races in the roller when one has failed.		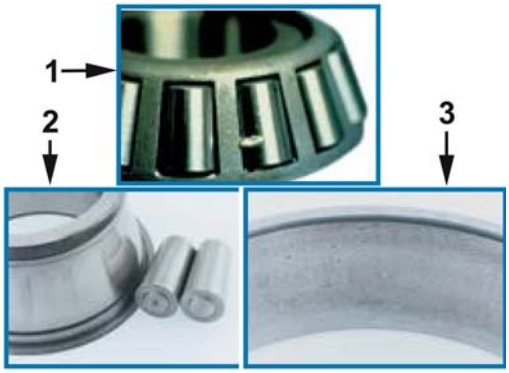
Inspect the bearings for the following: 1. Cage Deformation – Caused by improperly installed or dropped bearing. 2. Rollers Binding and Skewing – Caused by cage ring compression during installation. If any bearing or race exhibits any one of the above listed conditions, it must be replaced. It is a good maintenance practice to replace all bearings and races in the roller when one has failed.		
Inspect the bearings for the following: 1. Cone Large Rib Face Deformation – Caused by metal flow from excessive heat generation. 2. Total Bearing Lockup – Rollers skew, slide sideways and the bearing locks up. If any bearing or race exhibits any one of the above listed conditions, it must be replaced. It is a good maintenance practice to replace all bearings and races in the roller when one has failed.		

Inspect the bearings and races for the following: 1. Rapid and Deep Spalling – Caused by unusually high stresses. 2. Full Race Width Fatigue Spalling - Caused by heavy loads creating a thin lubricant film at elevated temperatures (do not check for unless bearing is being replaced). 3. True Brinelling – Caused by shock or impact to the bearing and race. If any bearing or race exhibits any one of the above listed conditions, it must be replaced. It is a good maintenance practice to replace all bearings and races in the roller when one has failed.		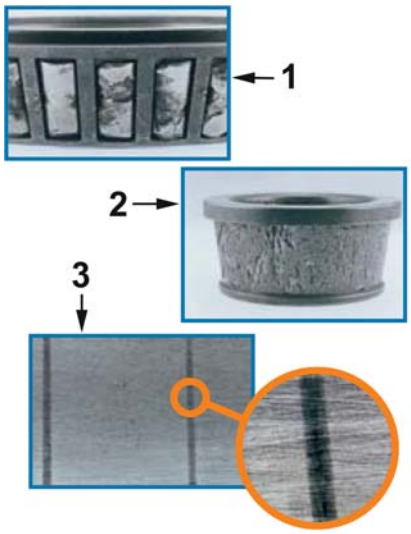
Note: Bearing shown disassembled to illustrate check. Do not disassemble bearing unless bearing is to be discarded. Inspect the bearings and races for the following: 1. Staining – Caused by corrosion from moisture. 2. Etching – Caused by rusting with pitting and corrosion from moisture and wear (do not disassemble bearing, check rollers only). If any bearing or race exhibits any one of the above listed conditions, it must be replaced. It is a good maintenance practice to replace all bearings and races in the roller when one has failed.		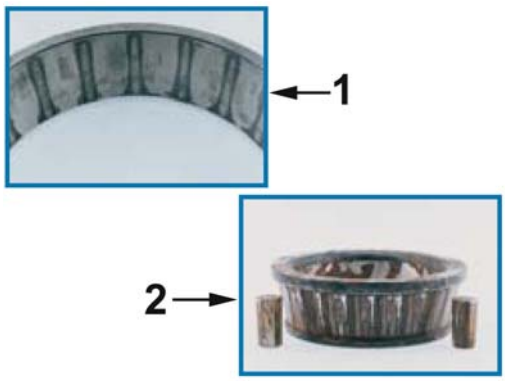
Note: Bearing shown disassembled to illustrate check. Do not disassemble bearing unless bearing is to be discarded. Inspect the bearings and races for the following: 1. Scalloping – Caused by uneven localized wear resulting from excessive end play. 2. Cage Pocket Wear – Caused by heavy contact between the rollers and cage pocket surfaces because of bearing operating to loosely (view of disassembled worn cage). If any bearing or race exhibits any one of the above listed conditions, it must be replaced. It is a good maintenance practice to replace all bearings and races in the roller when one has failed.		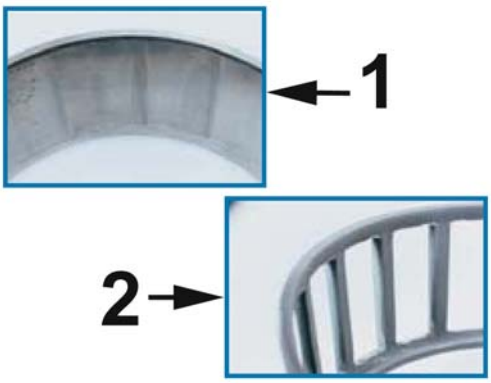

Inspect the bearing races for the following: 1. Line Spalling – Caused by bearings operating after etching damage. 2. False Brinelling – Wear caused by vibration or relative axial movement rollers and races. If any bearing or race exhibits any one of the above listed conditions, it must be replaced. It is a good maintenance practice to replace all bearings and races in the roller when one has failed.		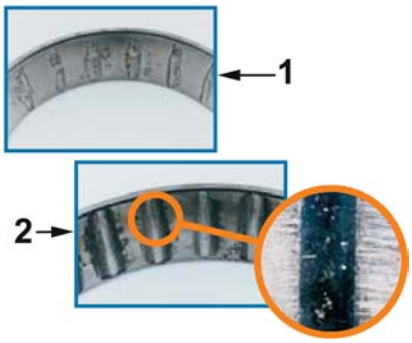
Inspect the bearing races for the following: 1. Irregular Roller Path – Caused by deflection, inaccurate machining or wear of bearing seats. 2. Opposing side view of race with irregular roller path. If any bearing or race exhibits any one of the above listed conditions, it must be replaced. It is a good maintenance practice to replace all bearings and races in the roller when one has failed.		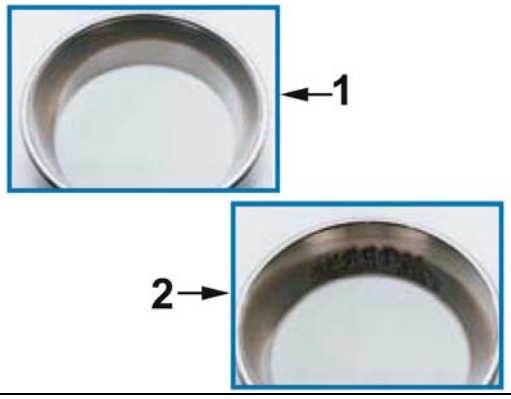
Note: Bearing shown disassembled to illustrate check. Do not disassemble bearing unless bearing is to be discarded. Inspect the bearing rollers for the following: 1. Roller End Scoring – Caused by metal-to-metal contact from the lubricating film break down. 2. Cone Face Scoring (Inner Race) – Caused by welding and heat damage from metal-to-metal contact. 3. Cone Face Scoring (Roller) – Caused by welding and heat damage from metal-to-metal contact. If any bearing or race exhibits any one of the above listed conditions, it must be replaced. It is a good maintenance practice to replace all bearings and races in the roller when one has failed.		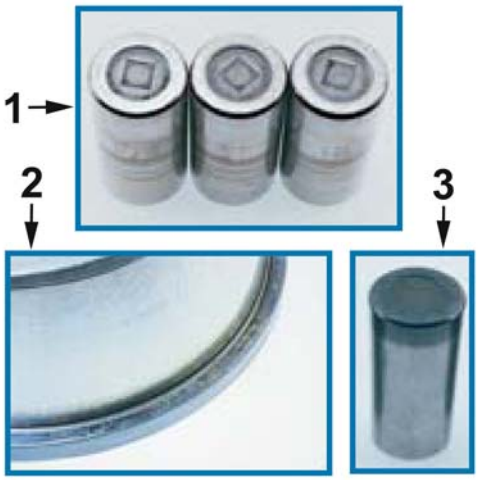

Note: Bearing shown disassembled to illustrate check. Do not disassemble bearing unless bearing is to be discarded. Inspect the bearing roller and outside race for the following: 1. Peeling (Roller) – Micro-spalling because of a thin lubricating film at high loads and low rpm or elevated temperatures. 2. Peeling (Race) – Micro-Spalling because of a thin lubricating film at high loads and low rpm or elevated temperatures. If any bearing or race exhibits any one of the above listed conditions, it must be replaced. It is a good maintenance practice to replace all bearings and races in the roller when one has failed.		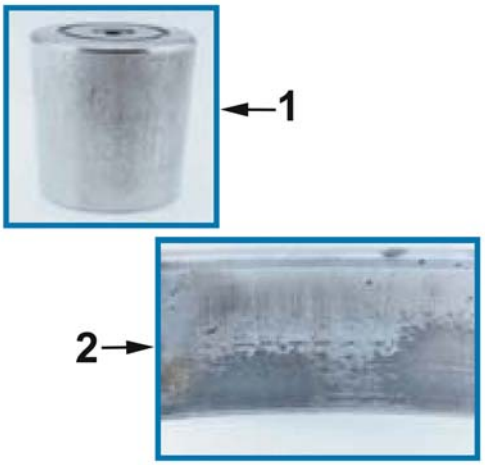
Note: Bearing shown disassembled to illustrate check. Do not disassemble bearing unless bearing is to be discarded. Inspect the bearing roller and outside race for the following: 1. Electric Arc Pitting – Small burns caused by arch from improper electric ground when bearing is not moving (welding on equipment). 2. Fluting – Series of small axial burns caused by electric current passing through the bearing while it is rotating. If any bearing or race exhibits any one of the above listed conditions, it must be replaced. It is a good maintenance practice to replace all bearings and races in the roller when one has failed.		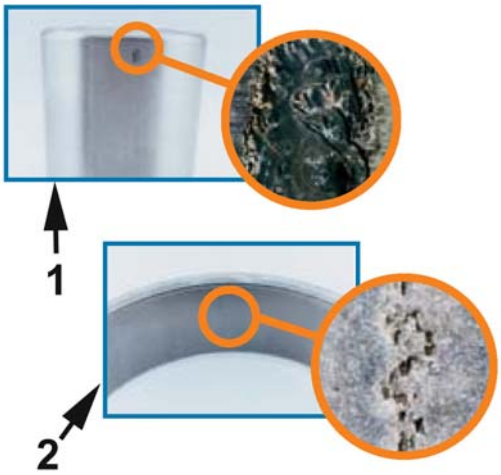
Assemble ***Drive Motor Side*** Lubricate a new o-ring with grease. Install the o-ring onto the axel housing. Make sure the o-ring is not twisted and sets flush on the axel housing.		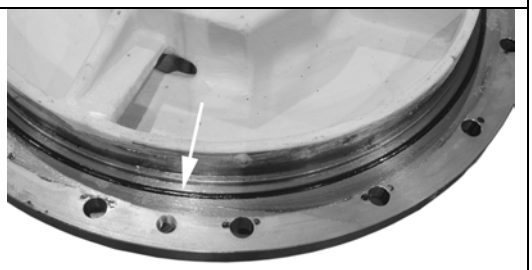

⚠ **Caution** **To reduce the possibility of premature bearing wear and damage, only apply pressure to the outside of the race when installing the bearing.** Install the roller bearing into the axel shaft housing. Make sure the bearing sets flush against the housing.		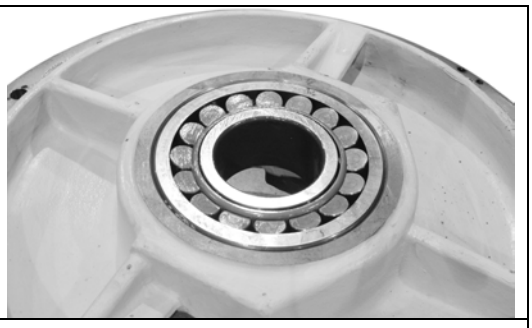
Lubricate a new o-ring with grease. Install the o-ring onto the drive motor. Make sure the o-ring is not twisted and sets flush on the drive motor.		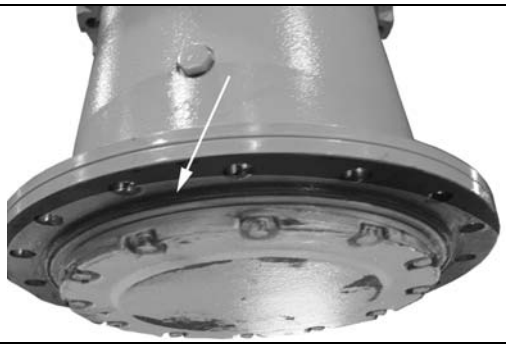
⚠ **WARNING** **This component requires a hoist to move. To reduce the possibility of personal injury, always use the lifting equipment that has proper capacity**. ⚠ **Caution** **To reduce the possibility of o-ring damage make sure the drive motor is lowered into the axel housing evenly.** Attach a lifting device to the drive motor. Raise the motor with a lift to make sure it is level. Lower the motor onto the axel housing aligning the mounting holes.		
Thread in all of the drive motor mounting bolts and washers into the axel housing. Tighten the bolts in sequence. Remove the lifting device.		

The roller has baffles welded to the interior of the chamber. The baffles direct the flow of bearing lubricating oil when the roller is turning. Make sure the baffles are securely attached.		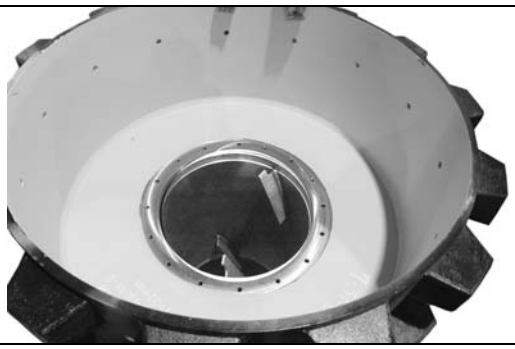
WARNING **This component requires a hoist to move. To reduce the possibility of personal injury, always use the lifting equipment that has proper capacity**. Attach a lifting device to the drive motor and axel housing assembly. Lower the drive motor and axel housing assembly down onto the roller aligning the bolt holes.		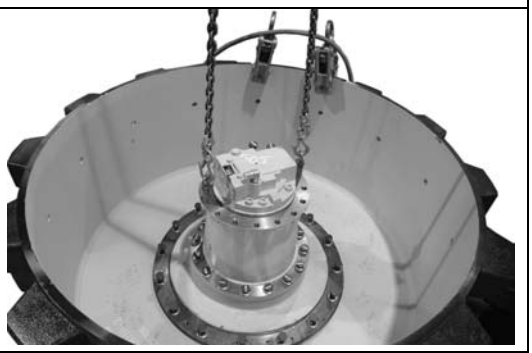
Thread all of the bolts into the axel housing. Tighten the bolts in sequence.		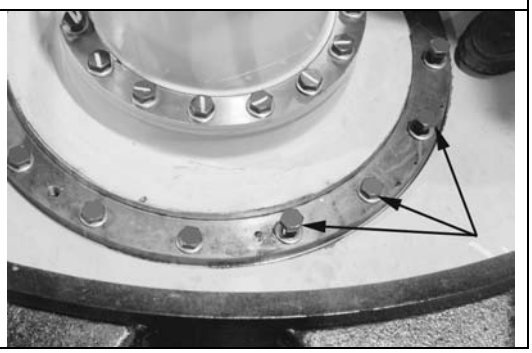

Six dampers attach to the base plate. Each damper has holes for four mounting bolts. Mounting bolts are installed from the bottom of the base plate. Insert bolts through the bottom of the base plate, into the damper mounting flange. Thread nuts with lock washers onto the bolts. Tighten the nuts onto the bolts.		
Holders are mounted to the upper damper flanges. Place the holders onto the dampers and align the holes with the holes in the damper flange.		
Insert the bolts through the top of the damper flange into the holder. Thread nuts with lock washers onto the bolts. Tighten the bolts.		
WARNING **This component requires a hoist to move. To reduce the possibility of personal injury, always use the lifting equipment that has proper capacity**. Attach a lifting device to the plate assembly. Place the bolts into plate assembly mounting holes. Lift the plate assembly level and place over the drive motor.		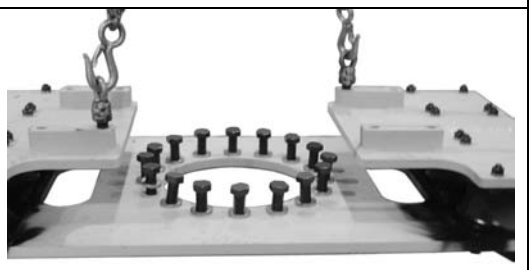

Align the plate assembly mounting bolts with the drive motor holes. Thread in all mounting bolts. Tighten the bolts in sequence. Remove the lifting device.		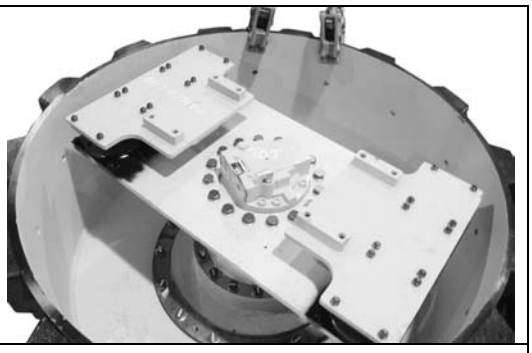
WARNING **This component requires a hoist to move. To reduce the possibility of personal injury, always use the lifting equipment that has proper capacity**. Install a lifting device. Flip the roller so the drive motor side of the roller is facing down. Set the roller on blocks to allow for drive motor clearance.		
Vibratory Motor Side Lubricate the axel shaft housing o-ring with grease. Install the o-ring onto the axel shaft housing.		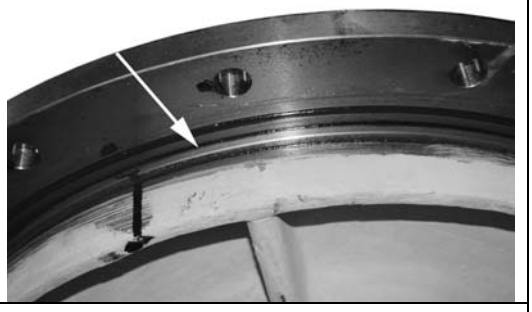
WARNING **To reduce the possibility of personal injury, wear eye protection when performing this step.** Place the bearing race on the axel drive bearing housing, drive side. Install the bearing race with a bearing driver. Make sure the race sets flush against the milled surface of the axel drive bearing housing.		

WARNING **To reduce the possibility of personal injury, wear eye protection when performing this step.** Turn the axel drive bearing housing over. Place the bearing race on the axel drive bearing housing. Install the bearing race with a bearing driver. Make sure the race is completely installed in the axel drive bearing housing.		
Place the seal on the axel drive bearing housing. Use a bearing drive to install the seal.		
Place the seal on the axel drive bearing housing cover. Use a bearing driver to install the seal.		
WARNING **To reduce the possibility of personal injury, wear eye protection when performing this step.** **Caution** **To reduce the possibility of bearing damage, make sure the bearing driver only contacts the bearing inner race.** Use a bearing drive to install the bearing onto the axel shaft. Make sure the inner race of the bearing sets flush on the shaft ledge.		

Apply a coating of grease to the bearing.		
Place the axel shaft bearing housing onto the axel shaft.		
Pack the remaining axel shaft bearing and cavity in grease. Place the axel shaft bearing onto the shaft.		
Place the shims that were removed during installation into the axel shaft bearing housing.		

Place the bearing retainer on top of the axel shaft and align the mounting holes. Install bolts with flat washers. Tighten the bolts in sequence. Place a dial indicator torque wrench on a bolt in the 90° position. Turn the axel shaft. Record the measurement. Rolling Torque: 30 to 60 N·m (22 to 44 ft-lb). If the rolling torque is not within limits, remove shims to decrease rolling torque and install shims to increase rolling torque.		
Place the bearing cover on top of the axel shaft bearing housing and align the mounting holes. Install bolts with flat washers. Tighten the bolts in sequence.		
The drive motor axel bearing is now located at the bottom of the roller chamber. Lubricate the bearing with oil.		

WARNING **This component requires a hoist to move. To reduce the possibility of personal injury, always use the lifting equipment that has proper capacity**. Thread a eyelet into the vibrator shaft. Attach a lifting device to the vibrator shaft with the splines of the shaft up. Carefully lower the shaft into the roller, aligning it with the propulsion inside bearing race. Remove the lifting device from the vibrator shaft.		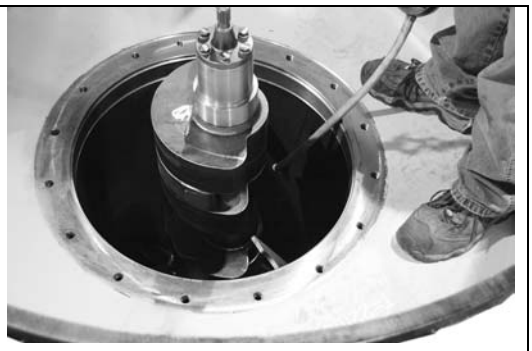
Add 35 liters (9.25 gallons) of oil to the roller chamber.		
WARNING **This component requires a hoist to move. To reduce the possibility of personal injury, always use the lifting equipment that has proper capacity**. Attach a lifting device to the axel housing. Lower the axel housing over the shaft and onto the roller, aligning the mounting holes.		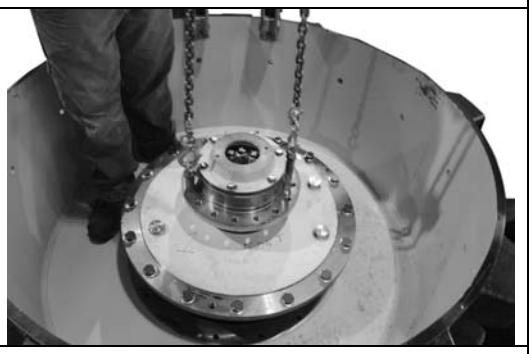
Thread bolts with flat washers into the roller. Tighten the bolts in sequence.		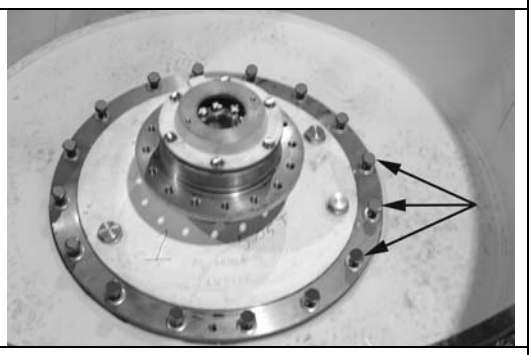

Inspect the rubber dampers for damage. If dampers are damaged they must be replaced. The vibratory motor side base plate has four dampers that mount onto it. Each damper flange has four mounting holes. Place the dampers on the base plate and align the mounting holes on the flanges.		
The bolts are installed from the bottom of the base plate into the damper mounting flange. Place the bolts through the holes. Thread nuts wash with washers onto the bolts. Tighten the bolts.		
Holders are mounted onto the damper upper flanges. Place the holders onto the dampers. Align the holder mounting holes with the holes in the damper.		
Place the bolts through the damper flange and through the holder. Thread nuts with flat washers onto the bolts. Tighten the bolts.		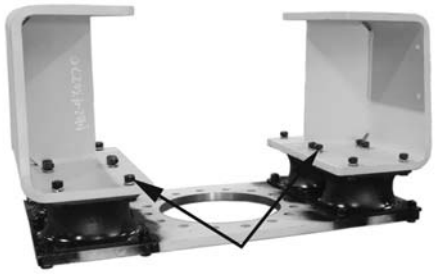

Set the holder assembly onto the axel shaft bearing assembly housing. Align the mounting holes. Thread in all bolts with washers. Tighten bolts in sequence.		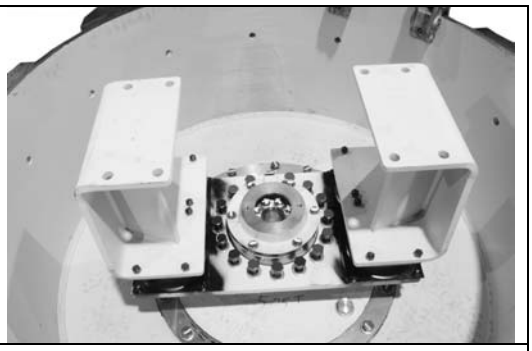
An extension connects the vibratory motor with the vibratory shaft. Place the extension onto the vibratory motor.		
Slide the vibratory motor with extension into the axel shaft. Turn the motor to align the vibratory motor shaft extension with the vibratory shaft.		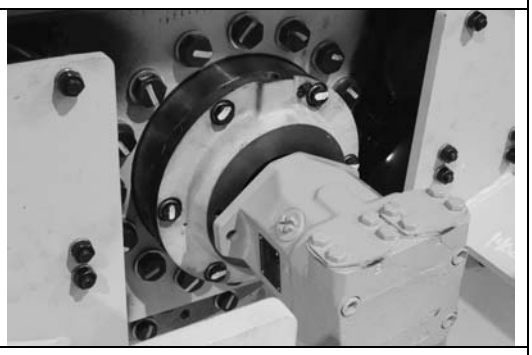
Thread the vibratory motor bolts in. Tighten the bolts.		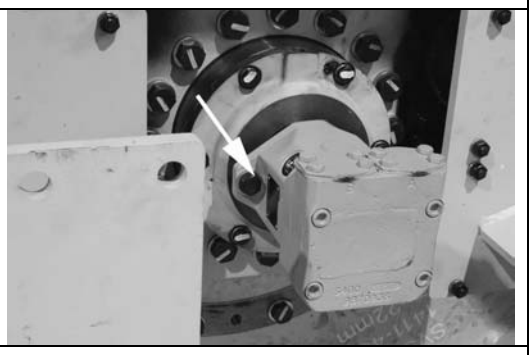

Install The pattern of the roller support holes is not symmetrical and will only align one way. Roll the roller into the front frame. Align the roller support holes.		
Install the roller support bolts and washers on the vibratory motor side of the roller. Tighten the bolts.		
Install the roller support bolts and washers on the propulsion side of the roller. Tighten the bolts.		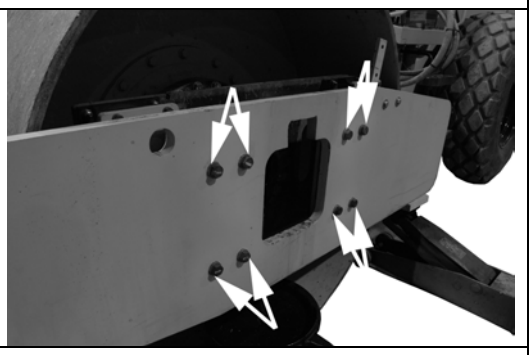
WARNING **This component requires a hoist to move. To reduce the possibility of personal injury, always use lifting equipment that has proper capacity.** Connect a hoist to the scraper bar. Slide the scraper bar into the front frame. Align the scraper bar holes with the front frame.		

Install the bolts and nuts into the scraper bar. Tighten the nuts.		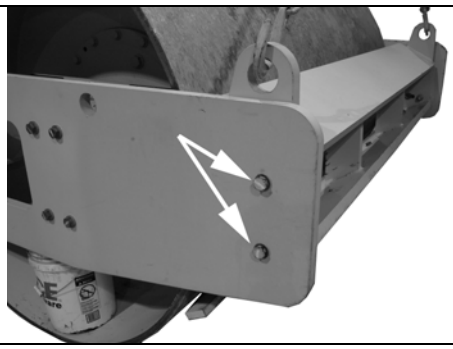
Remove the lifting device from the scraper.		
Place the hydraulic hose holders onto the front frame. Align the holes. Install bolts and nuts. Tighten the nuts.		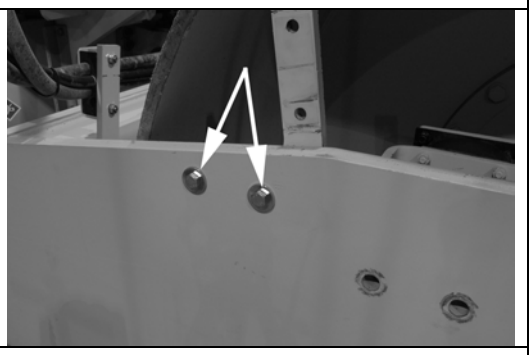
Connect the hydraulic hoses to the vibratory motor. Connect the hydraulic hoses to the propulsion motor.		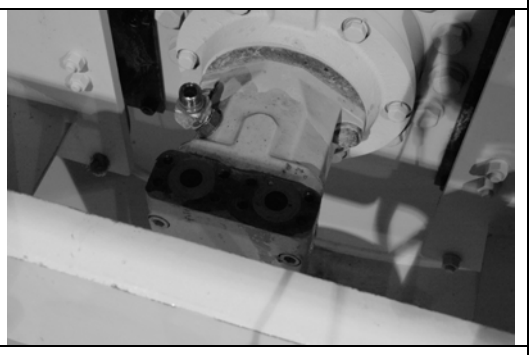

Lower and remove the jacks.		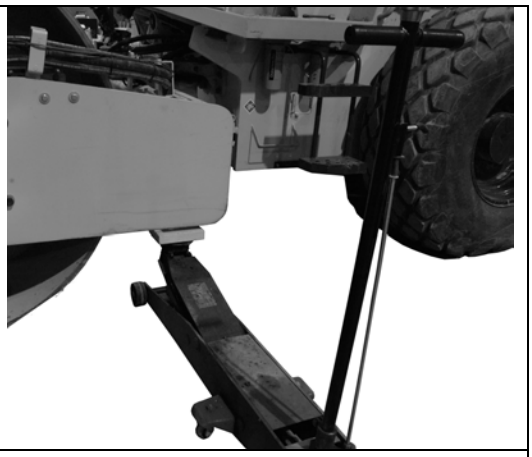
Disengage the safety bar.		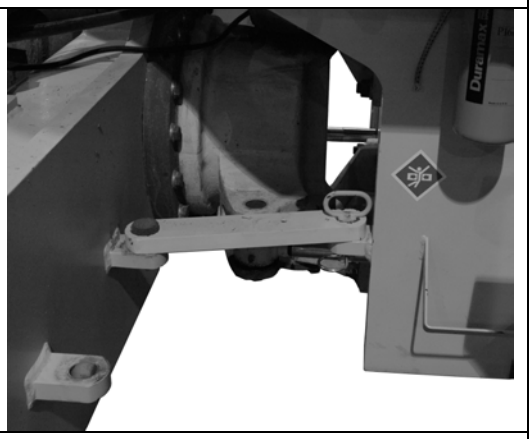
Center Pin **Remove** Disconnect the left steering cylinder from the center pin. Disconnect the right steering cylinder from the center pin.		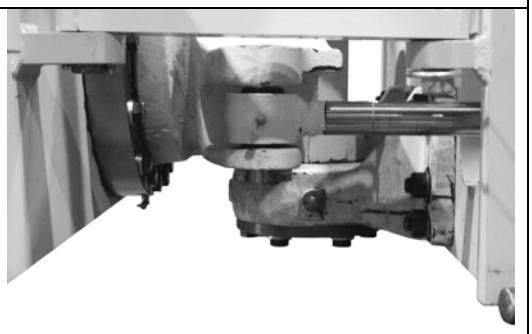
WARNING **This component requires a hoist to move. To reduce the possibility of personal injury, always use the lifting equipment that has proper capacity.** Support front and rear frames. Remove the front frame center pin mounting bolts from the frame.		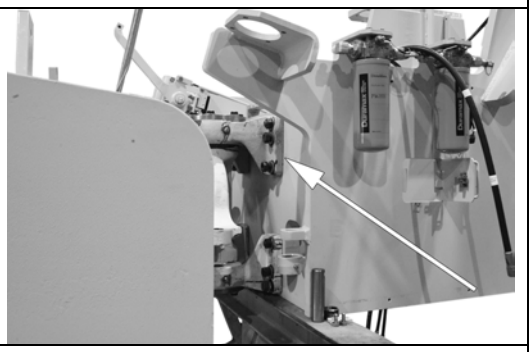

WARNING **This component requires a hoist to move. To reduce the possibility of personal injury, always use the lifting equipment that has proper capacity.** Attach a lifting device to the center pin. Remove the steering bearing mounting bolts and center pin from the frame.		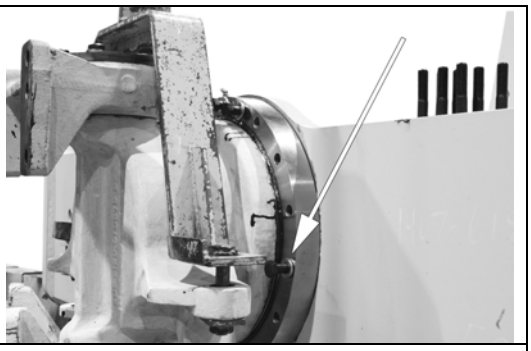
Disassemble Remove the grease sert from the ring bearing.		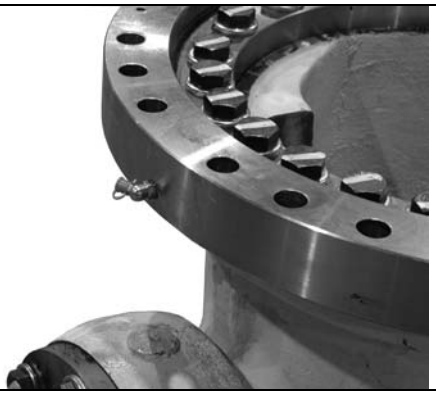
Remove the ring bearing bolts and washers. Remove the ring bearing.		
The center pin has bearing end caps on each side. Remove the end cap bolts. Remove the end caps.		

WARNING **This component requires a hoist to move. To reduce the possibility of personal injury, always use the lifting equipment that has proper capacity.** Attach a lifting device to the yolk (1). Use a inside bearing puller to remove the brackets from the yolk (2).		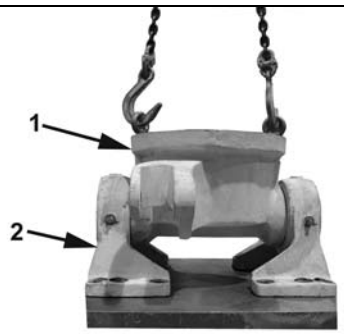
Remove the o-ring from each of the yolk shafts.		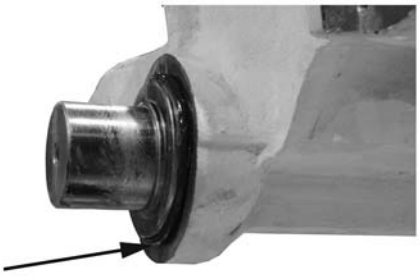
Place a bracket into a fixture as illustrated. Press both bearings out of bracket. Repeat the process for the remaining bracket.		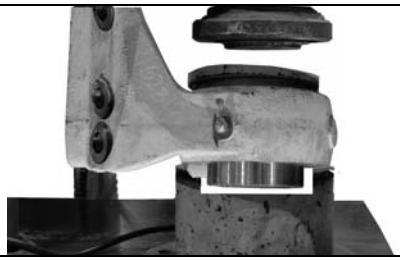
Remove the grease sert from a bracket. Repeat the process for the remaining bracket.		

Clean **WARNING** **When cleaning with solvents, acids, or alkaline materials, follow the manufacturer's recommendations for use. Wear goggles and protective clothing to reduce the possibility of personal injury.** **WARNING** **To reduce the possibility of personal injury, wear eye and face protection when using compressed air.** Bearings must be replaced. Clean all components in solvent and dry with compressed air.		
Assemble Thread the grease sert into the center pin bracket. Tighten the grease sert.		

There two styles bearings in each of the brackets. A bearing with a separate outside race is installed first and a bearing assembly is installed second. Place the bracket into a fixture in a press with the lip end down. Place the bearing race into the bracket. Press the bearing race down until it sets flush on the bracket lip. Place the bearing assembly in the bracket with the large side of the bearing facing down. Press the bearing assembly down until it sets flush on the first bearing. Repeat the process for the remaining bracket.		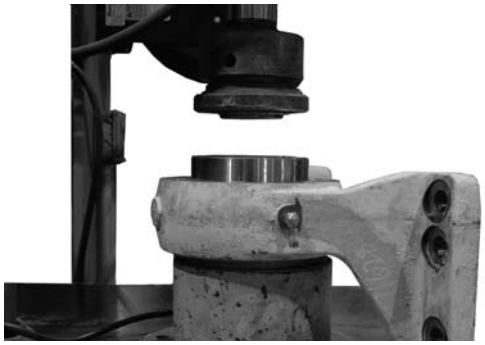
When greasing the bearing it must be rotated. Grease the bearing. Repeat the process for the remaining bracket.		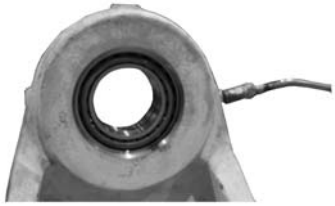
Apply a light coat of grease to a new o-ring. Place the o-ring onto the yoke shaft. Repeat the process for the remaining yoke shaft.		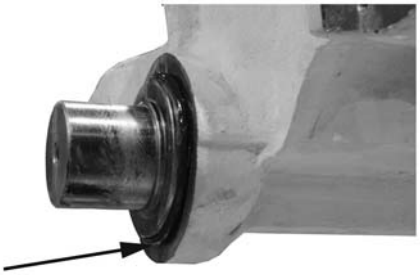

WARNING **This component requires a hoist to move. To reduce the possibility of personal injury, always use the lifting equipment that has proper capacity.** Attach a lifting device to the yoke. Place the brackets on each end of the yoke, aligning the yoke shafts with the inside bearing race of the bracket bearings. Press both brackets onto the yoke.		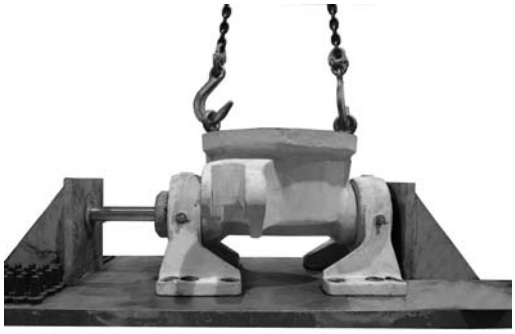
One of the end cap requires an o-ring. Lubricate and install the o-ring into the cap that faces the bottom when the center pin is installed. Place the end cap onto the bracket. Align the mounting holes. Thread in the bolts with washers. Tighten the bolts in sequence. Torque: 295 N·m (265 ft-lb)		
Place the ring bearing onto the yoke. Align the mounting holes. Thread in all bolts with flat washers.		

Finger-tighten all bolts. Tighten the bolts in sequence to: 265 N·m (196 ft-lb).		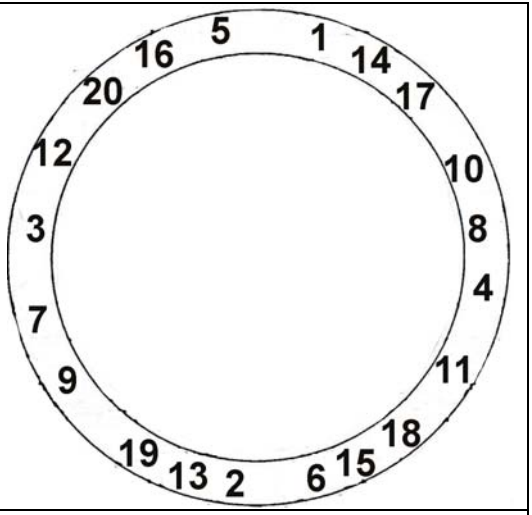
Thread the grease sert into the ring bearing.		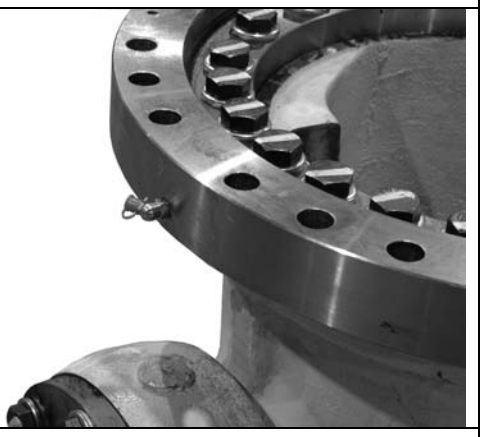
Turn the ring bearing so the small alignment hole and the grease sert are positioned as shown in the illustration.		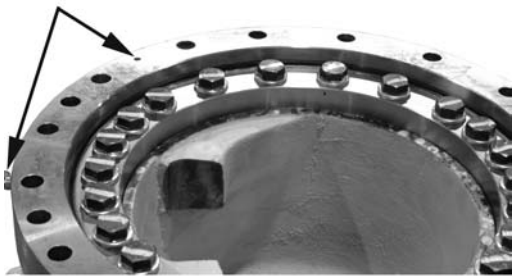
Install **WARNING** **To reduce the possibility of personal injury, use protective glasses when using rotary cleaning tools.** **WARNING** **When using solvents, acids, or alkaline materials for cleaning, follow the manufacturer's recommendations**		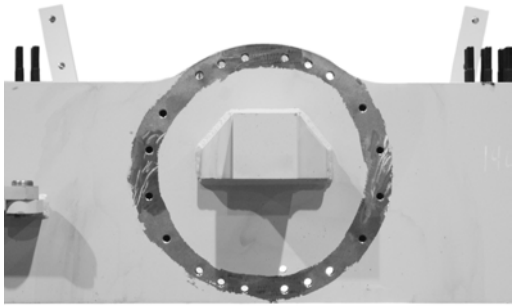

for use. Wear goggles and protective clothing to reduce the possibility of personal injury. Use a wire brush and or solvent to clean the area the on the front frame the center pin will be mounted. Make sure all threaded holes are free from debris and have functional threads.		
WARNING **This component requires a hoist to move. To reduce the possibility of personal injury, always use lifting equipment that has proper capacity.** Attach the component to a lifting device with the bearing plug to the 10 o'clock position.		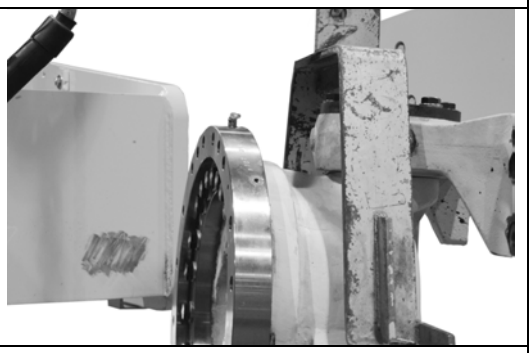
Align the holes of the center pin with the threaded holes of the front frame. Thread all of the bolts in finger tight.		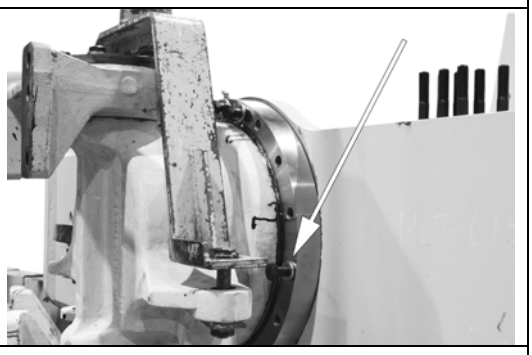
Torque sequence allows the component to be tightened in an even manner. Tighten all of the bolts, in sequence, until the center pin sets flush against the front frame. Release tension on the hoist. Tighten the bolts in sequence to: 265 N·m (196 ft-lb). Remove the lifting device.		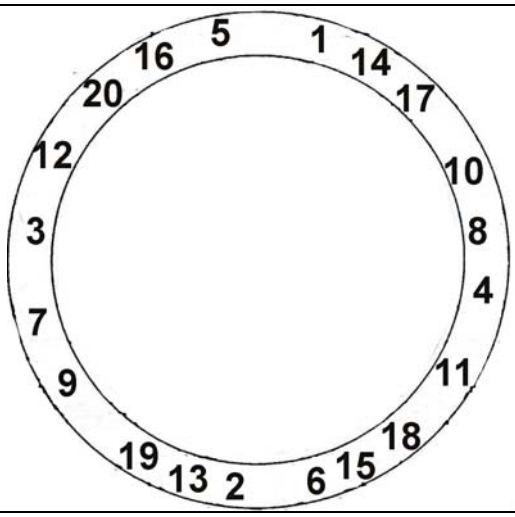

WARNING **This component requires a hoist to move. To reduce the possibility of personal injury, always use lifting equipment that has proper capacity.** Make sure the rear frame is secured on stands. Place lifting straps on the front frame so when the frame is lifted the upper center pin mount will touch first. Align the upper left center pin mount and thread the bolts in finger tight. Align the upper right center pin mount and thread the bolts in finger tight. Lower the lift and align the left lower center pin mount and thread in the bolts finger tight. Align the lower right center pin mount and thread the bolt in finger tight. Tighten the center pin mounting bolts. Torque: 540 N·m (399 ft-lb). Remove the lifting device.		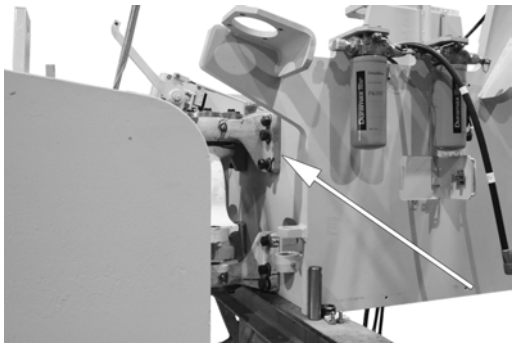
Slide the left steering cylinder into the center pin brackets. Slide the pin through the bracket and into the steering cylinder piston. Place the locking plate into the groove of the pin. Install the bolts and tighten. Remove the lifting device.		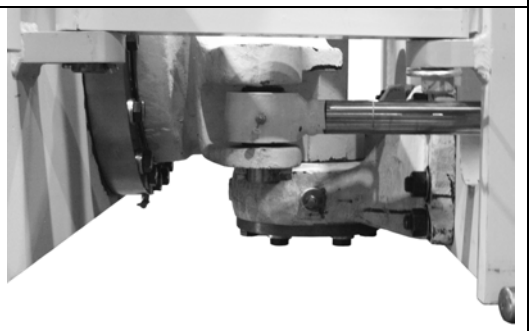
Operators Station **Remove** Remove the vibratory panel cover mounting bolts from the frame. Remove the vibratory panel cover.		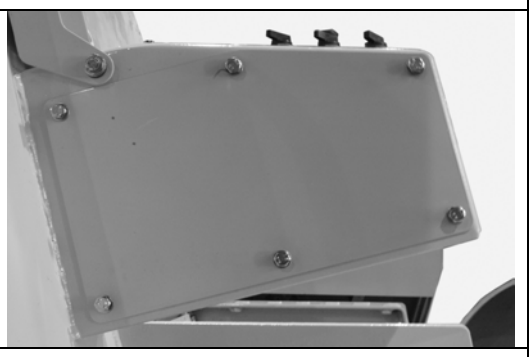

Disconnect the vibration control switches.		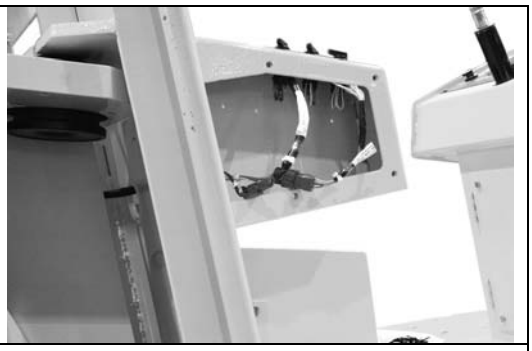
Loosen directional control cable lock nut.		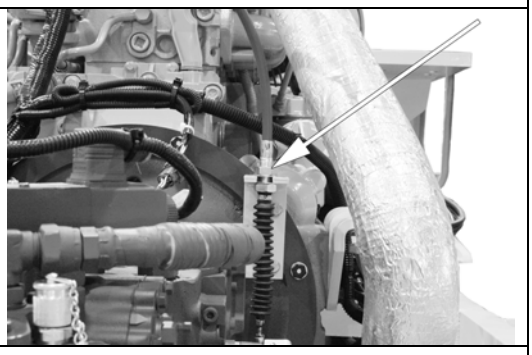
Remove the bolt, washer and lock washer from the directional control cable.		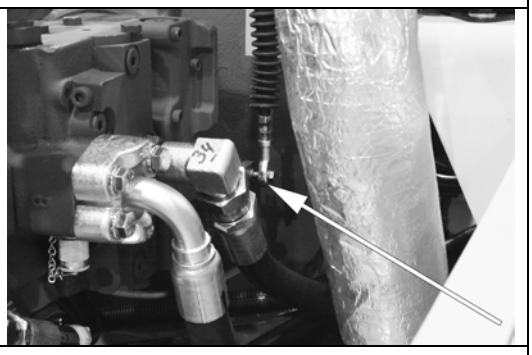
WARNING **Hydraulic fluid is under pressure. To reduce the possibility of personal injury, make sure the hydraulic system is not under pressure prior to removing hoses.** Bleed the hydraulic pressure from the steering system. Remove the steering control hoses from the arbitrol valve.		

Remove the lower operator station flat, lock and nut.		
Remove the upper operator station mounting nut.		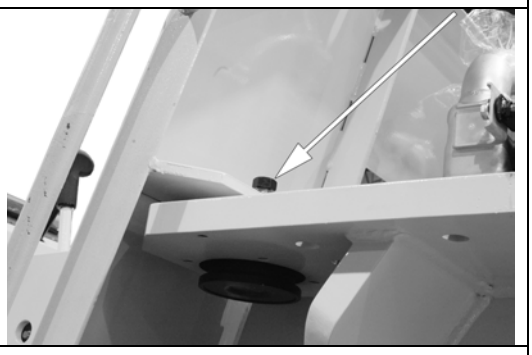
WARNING **This component requires a hoist to move. To reduce the possibility of personal injury, always use the lifting equipment that has proper capacity.** Connect an approved lifting device to the operator's station. Raise the operator's station off of the mounts.		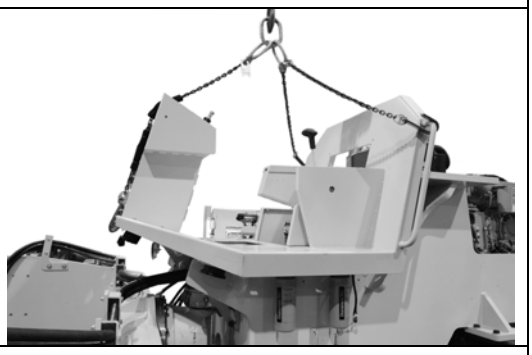
Disconnect harness p-clip and allow harness to drop down. Remove the operator station.		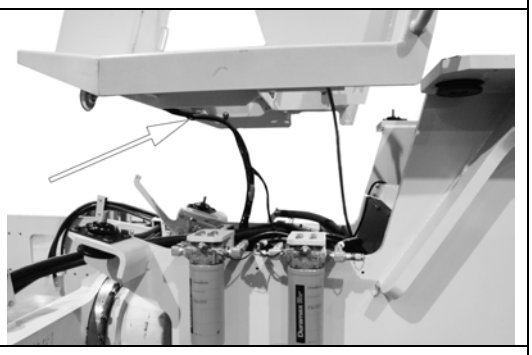

Install **WARNING** **This component requires a hoist to move. To reduce the possibility of personal injury, always use lifting equipment that has proper capacity.** Connect the operator's station to a lifting device and position over the installed mounts**.** Route the directional control cable into rear frame. Route the cable into the rear frame.		
Align the operator's station holes with the front and rear mounts. Lower the operator's station onto the mounts.		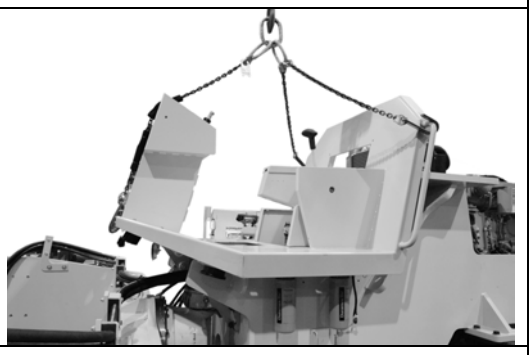
Align the rear operator's station mounting bracket hole with the left rear mount. Thread in the bolt and flat washer. Do not tighten the bolt. Repeat for the right rear mount.		
Align the front operator's station mounting bracket hole with the left front mount. Install the nut and flat washer. Do not tighten the nut. Repeat the process for the right front mount. Tighten the front operator's station mounting nuts. Tighten the rear operator's station mounting bolts.		

Connect the hydraulic hoses to the Orbitrol steering control valve.		
Place the direction control cable into the bracket. Tighten the lock nut.		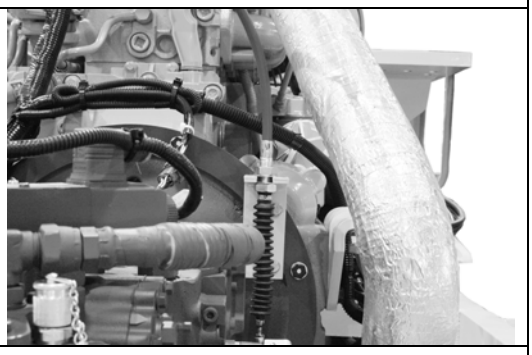
Place a flat washer then lock washer over the directional cable bolt. Slide the bolt through the cable. Thread the bolt into directional control valve. Tighten the bolt.		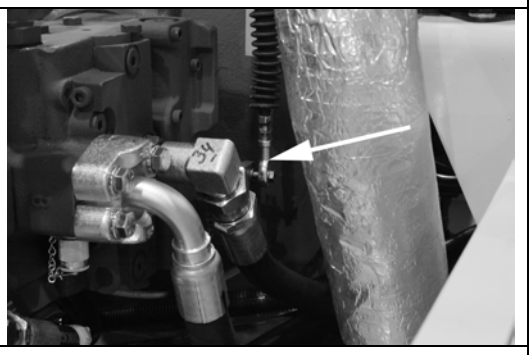
Connect the operator's station vibration control switch connectors with the wiring harness connectors.		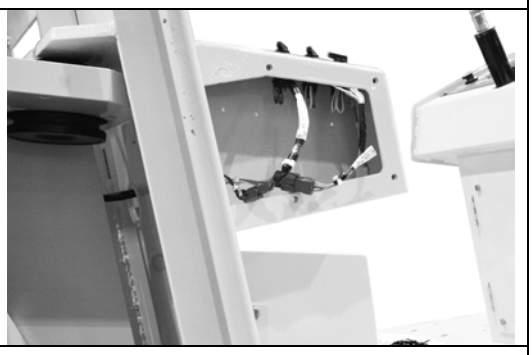

Place the cover onto the vibratory control switch panel. Align the holes. Thread in bolts with flat washers. Tighten the bolts equally.		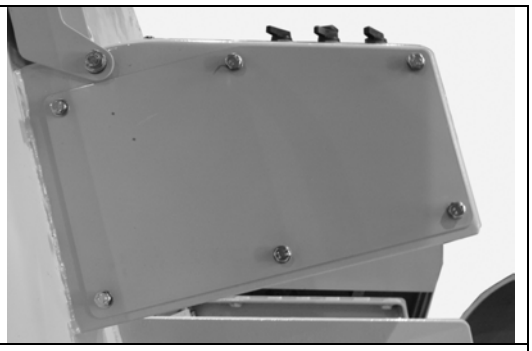
Manual Vibration Control Switch **Remove** The manual vibration control switch is located in the directional control lever. Remove the bolts and washers from the directional control lever console cover. Remove the directional control lever console.		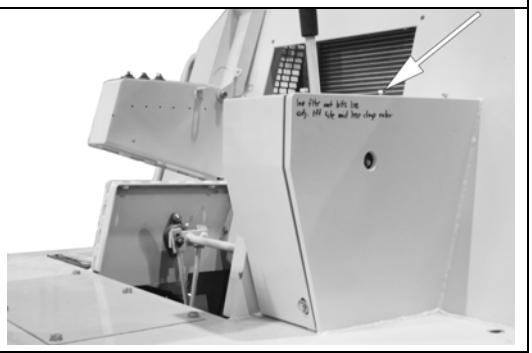
Record the location of the manual vibration control switch wires. Disconnect the wires. Loosen the setscrew in handle of the directional control lever. Slide the handle off of the directional control lever.		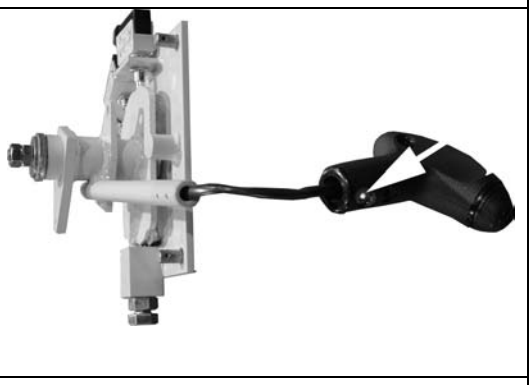
Install Slide the cable through the directional control lever. Push the handle onto the directional control lever. Align the setscrew hole. Tighten the setscrew.		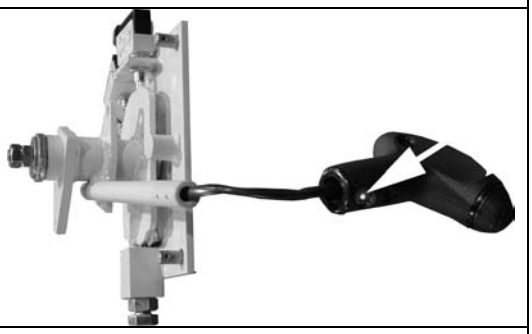

Place the directional control lever consol cover onto the console. Align the mounting holes. Thread in bolts with washers. Tighten the bolts.		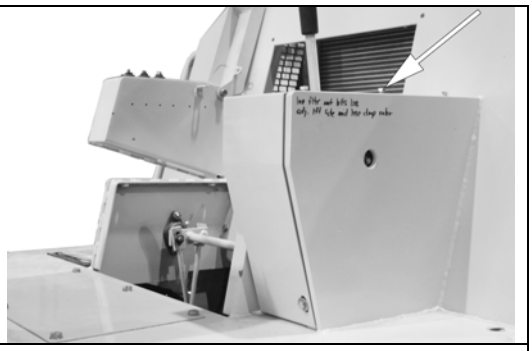
Vibratory Control Panel Switches **Remove** The switches contained in the vibratory control panel are: • Vibration amplitude control • Vibration continuous and manual control • Compactor speed (rabbit/turtle). All switches are replaced using the same procedure. Remove the vibratory panel cover mounting bolts from the frame. Remove the vibratory panel cover.		
Remove the mounting screws from the vibratory control switch panel. The switches are connected to the wiring harness through one common connector. Disconnect the switch connector from the wiring harness connector. Remove the panel and switches.		

Record the location of the wires on the failed switch. Disconnect the wires on the switch. Remove the mounting nut from the switch.		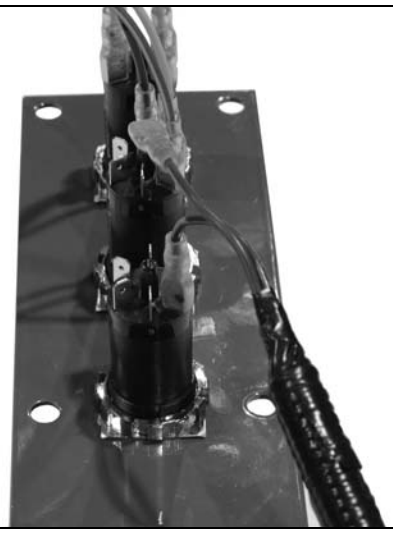
Slide the securing plate off of the switch. Slide the switch through the front of the panel.		
Install Securing plate has a tab on each corner. The tabs point down when the plate is installed. Slide the switch through the front of the panel. Place the securing plate over the switch with the tabs point down.		

Thread the mounting nut onto the switch. Tighten the nut. Connect the wires.		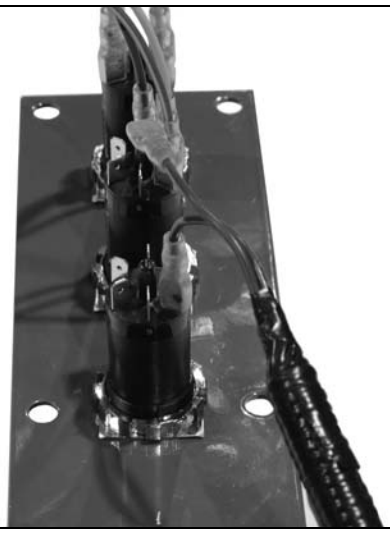
Route the switch cable through the vibration control console. Place the panel onto the console and align the mounting holes. Install the screws and tighten.		
Place the cover onto the side of the console aligning the mounting holes. Thread in bolts with washers. Tighten the bolts.		
Combination Meter **Remove** The combination meter is secured to the dash panel by screws installed from the inside of the console. The entire dash panel must be removed to remove the combination meter. Remove the bolts with washers from the dash front cover. Remove the front cover.		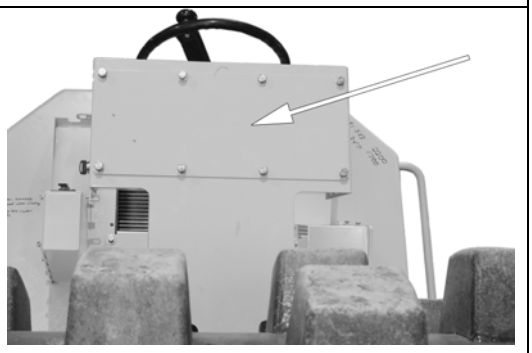

Record the location of the wires and connectors for the engine speed switch, engine status lamps, combination meter and parking brake. Disconnect the wires to the engine speed switch. Disconnect the wires to the engine status lamps. Disconnect the connectors for the combination meter. Disconnect the parking brake.		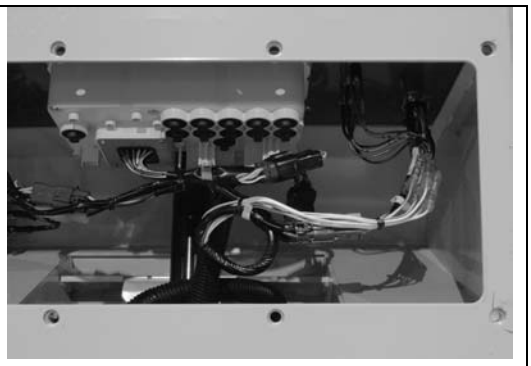
Remove the horn cover. Remove the steering wheel mounting nut and washer. Pull the steering wheel up, removing it from the steering column.		
Remove the dash panel mounting screws. Lift the dash panel off of the console.		
Remove the screws located at the corners of the combination meter. Slide the combination meter through the front of the panel.		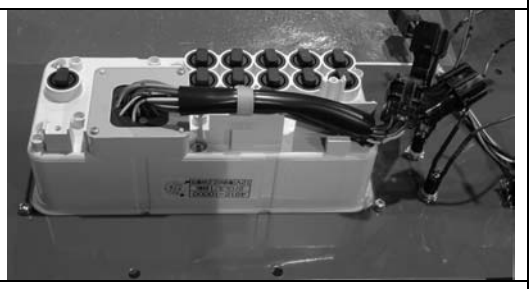
Install Slide the combination meter through the front of the panel. Align the mounting holes. Thread in the screws. Tighten the screws.		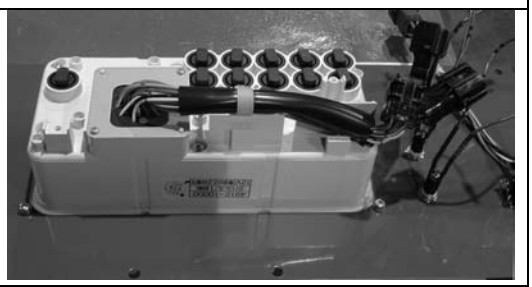

Set the dash panel onto the console. Align the mounting holes. Thread in the screws. Tighten the screws.		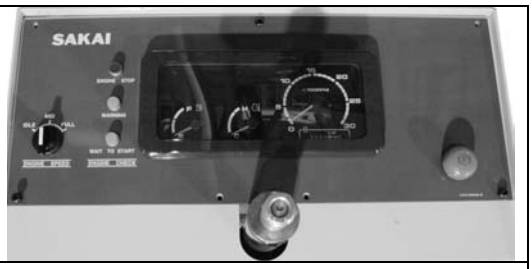
Set the steering wheel onto the steering column with the speed knob to the left. Thread nut with washer onto steering column. Tighten nut. Install horn cover.		
Connect the wires to the engine speed switch. Connect the wires to the engine status lamps. Connect the connectors for the combination meter. Connect parking brake wires.		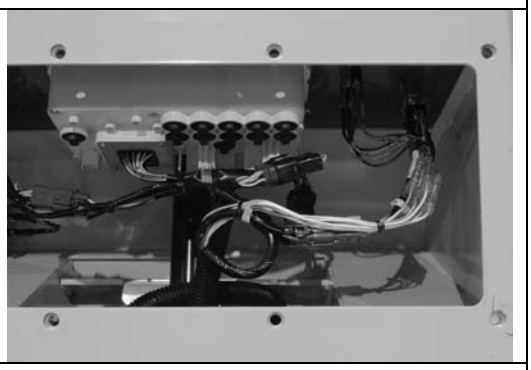
Place the dash front cover onto the dash. Align the mounting holes. Thread in bolts with washers. Tighten the bolts.		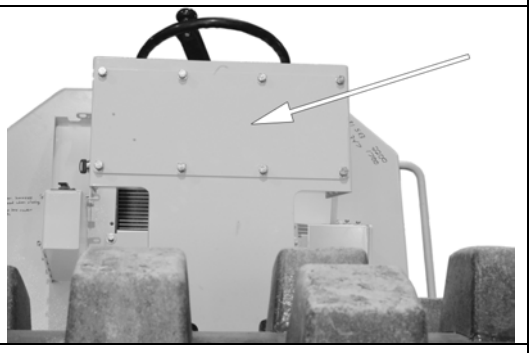

Parking Brake Button **Remove** Remove the dash front cover bolts and washers. Remove the dash front cover.		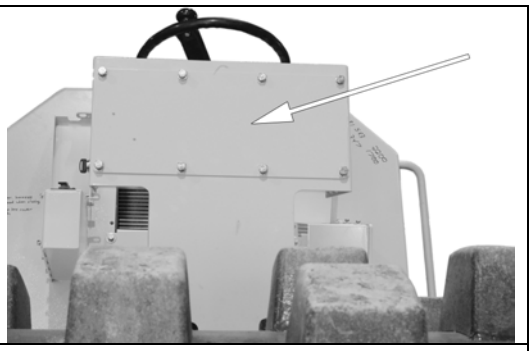
Record the location of the wires that connect to the parking brake switch. Disconnect the parking brake switch wires.		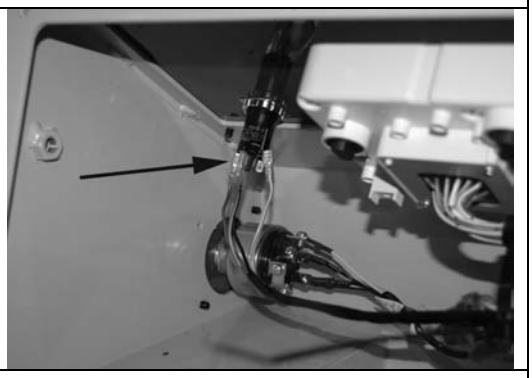
Remove the parking brake mounting nut and securing plate. Slide the parking brake switch out the front of the panel.		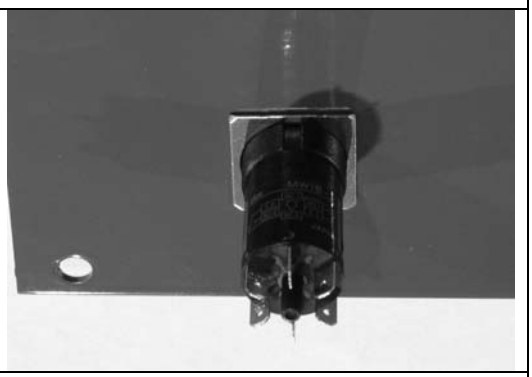
Install Slide the parking brake switch through the front of the panel. Slide the securing plate onto the switch with tabs down. Thread the mounting nut onto the parking brake switch.		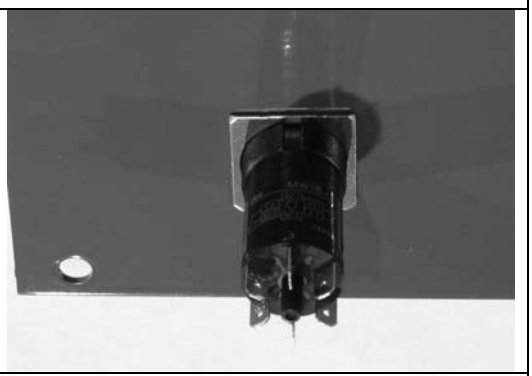

Tighten the mounting nut. Connect the wires to the parking brake switch.		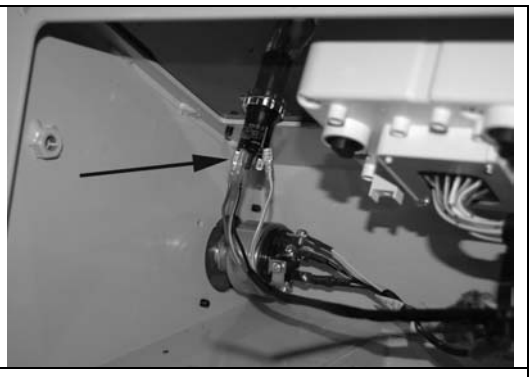
Place the dash front cover onto the dash. Align the mounting holes. Thread in bolts with flat washers. Tighten the bolts.		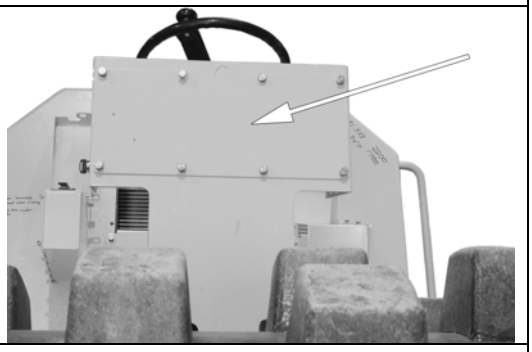
Engine Status Lamps **Remove** *Lamp* The three engine status lamps on the dash panel are: • ENGINE STOP • WARNING • WAIT TO START. The procedure to change lamps and fixtures is the same for all three lamps. If a lamp is burned out, it can be changed by un-screwing the plastic cover.		
Lamp Fixture Remove the dash front cover bolts and flat washers. Remove the dash front cover.		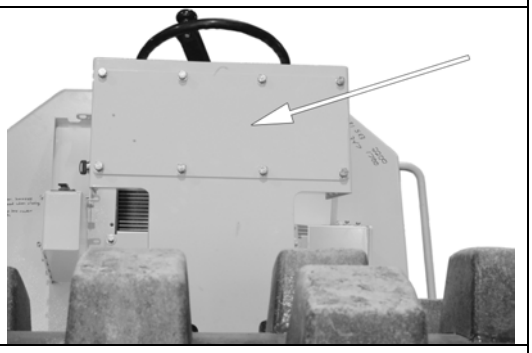

Remove the right cooler hydraulic hose.		
Loosen the lower radiator hose clamp. Disconnect the lower radiator hose.		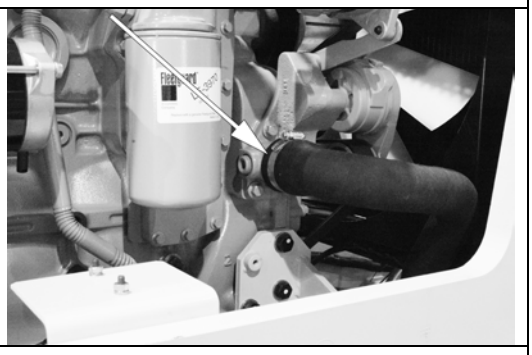
Loosen the upper radiator hose clamp. Disconnect the upper radiator hose.		
Remove the radiator fan guard mounting bolts and spacers. Remove fan guard.		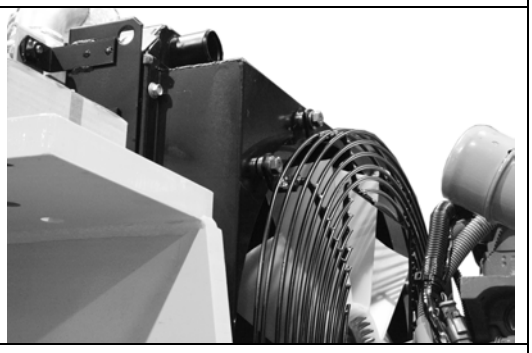

Remove the upper radiator mounting bolts from the left side of the radiator. Repeat the process for the right side of the radiator.		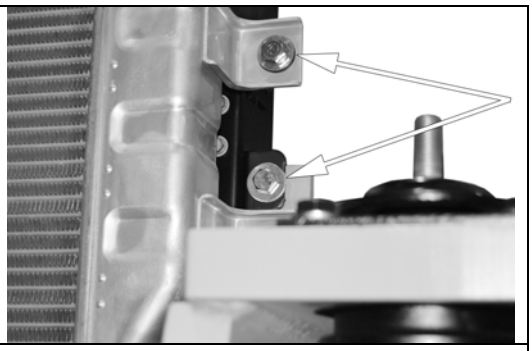
Remove the lower radiator mounting bolts from the left side of the radiator. Repeat the process for the right side of the radiator.		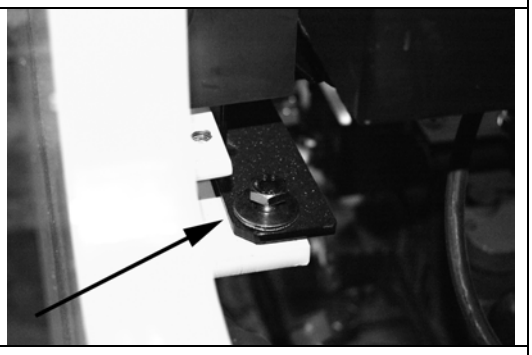
WARNING **This component requires a hoist to move. To reduce the possibility of personal injury, always use the lifting equipment that has proper capacity.** Connect the lifting chain to radiator and overhead hoist. Remove the radiator from the frame.		
Install **WARNING** **This component requires a hoist to move. To reduce the possibility of personal injury, always use lifting equipment that has proper capacity.** Attach a lifting device to the radiator. Lift the radiator and place into the compactor frame.		

The radiator has lower mounting brackets on the right and left side. Align the left side brackets and thread in a bolt with a flat washer. Do not tighten the bolt completely. Repeat the process for the right hand side.		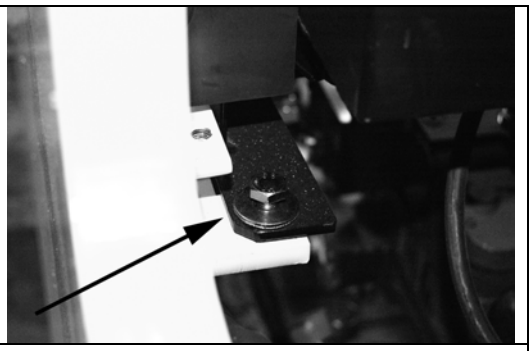
The radiator has upper mounting brackets on the right and left side. Align the left side brackets and thread in a bolt with a flat washer. Do not tighten the bolt completely. Repeat the process for the right hand side. Tighten the upper and lower, left and right radiator mounting bolts.		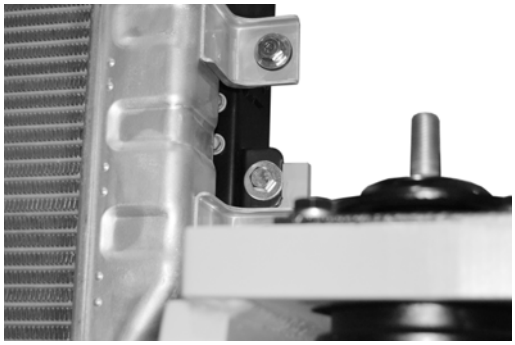
Place fan guard spacers onto the studs on the radiator. Place the fan guard onto the studs. Make sure the fan guard sets flush on the spacers and is centered with the fan. Thread nuts onto the fan guard studs. Tighten nuts equally. Remove the lifting device.		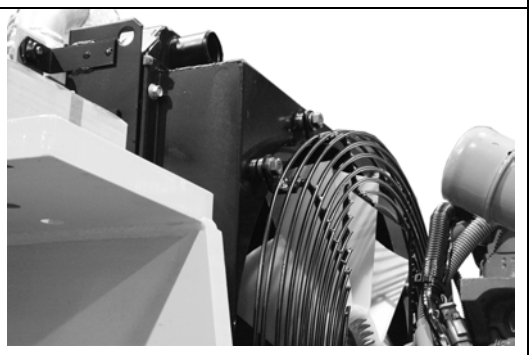
Place a hose clamp around the upper radiator hose. Slide the hose onto the radiator connection. Tighten the clamp.		

Place a hose clamp around the lower radiator hose. Slide the hose onto the radiator connection. Tighten the clamp.		
Install the left JIC style cooler hose and tighten the fitting.		
Install the right JIC style cooler hose and tighten the fitting. Fill the cooling system with coolant.		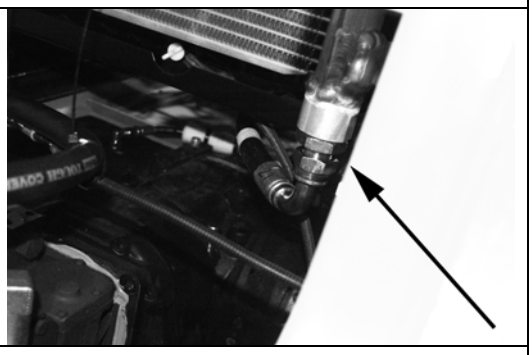
Hydraulic Tank **Remove** **WARNING** **Hydraulic fluid is under pressure. To reduce the possibility of personal injury, vent the hydraulic system prior to loosening a fitting or removing a hose.** Make sure the hydraulic pressure is released from the system. Drain the hydraulic fluid. Remove the hoses from the hydraulic tank.		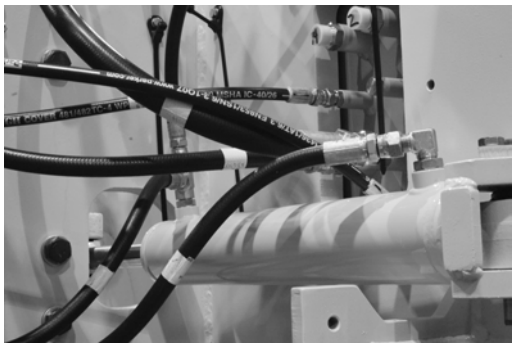

Remove the hydraulic suction hose from the hydraulic tank.		
WARNING **This component requires a hoist to move. To reduce the possibility of personal injury, always use the lifting equipment that has proper capacity.** Attach an approved lifting device. Remove the bolts. Remove the hydraulic tank from the frame.		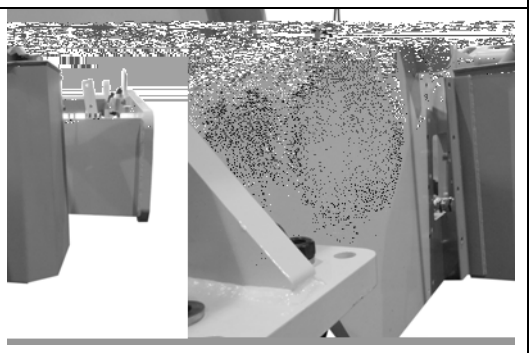
Install **WARNING** **This component requires a hoist to move. To reduce the possibility of personal injury, always use lifting equipment that has proper capacity.** Attach a lifting device to the hydraulic tank. The tank is mounted to the rear frame at the right front side.		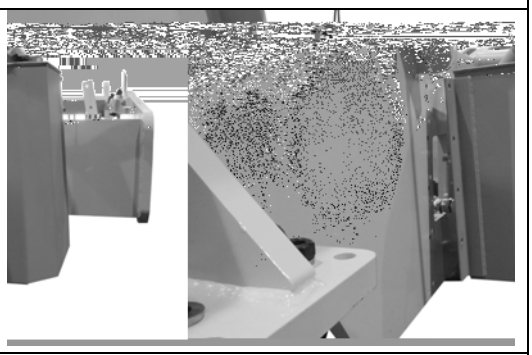
Align the mounting holes in the hydraulic tank with the threaded holes in the frame. Thread all of the bolts in and tighten finger tight. Tighten the bolts. Remove the lifting device.		

Connect the hydraulic supply hoses to the hydraulic tank.		
Install the hydraulic suction hose to the hydraulic tank.		
Engine and Pump Assembly **Remove** **WARNING** **Batteries can emit explosive gases. To reduce the possibility of personal injury, always ventilate the compartment before servicing the batteries. To reduce the possibility of arcing, remove the negative (-) battery cable first and attach the negative (-) battery cable last.** Remove the battery box cover. Remove the negative battery cable from the battery. Remove the positive battery cable from the battery.		
WARNING **To reduce the possibility of personal injury, use a strap and hoist with proper lifting capacity.** Connect lifting strap to handles on the hood. Use a hoist to raise the hood to a vertical position.		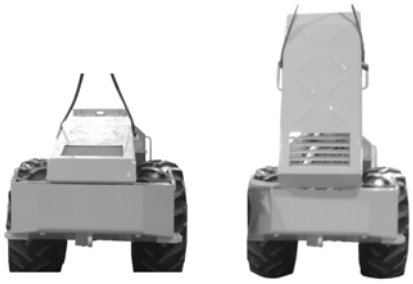

Remove the safety chain mounting bolts from hood and frame. Remove the safety chain.		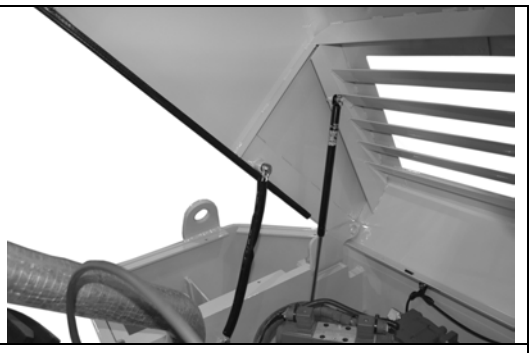
Remove the cotter key and flat washer from the hood assist cylinder.		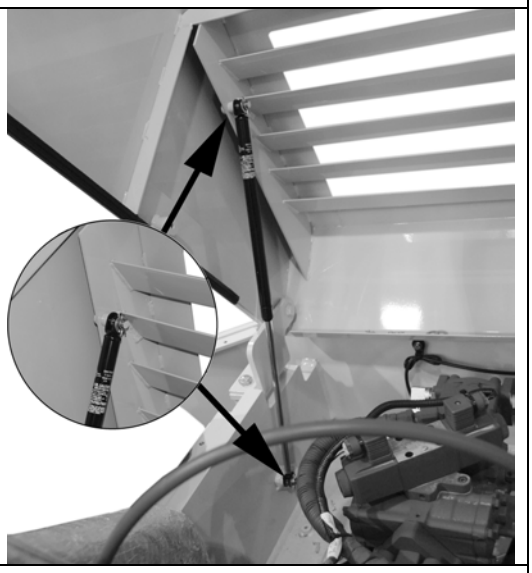
The frame has two hinges. Remove the hinge mounting bolts from frame. Repeat for removing hinge. Lift the hood off of compactor frame with a hoist.		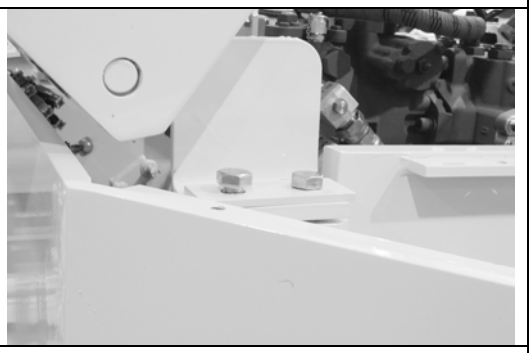
Loosen the tube clamps. Remove the turbocharger compressor to cooler supply tube clamp.		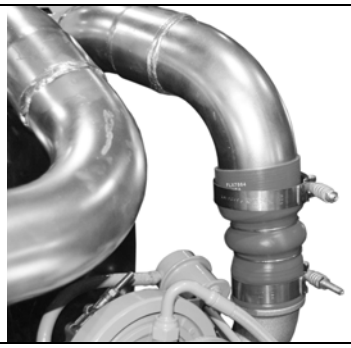

Loosen the intake manifold hose clamp. Remove the intake manifold to cooler tube from the cooler hose.		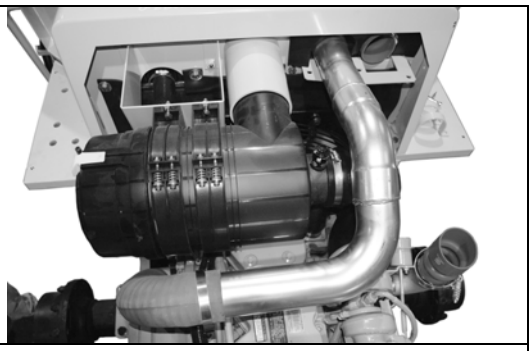
Loosen the turbocharger compressor housing rubber boot clamp. Remove rubber boot.		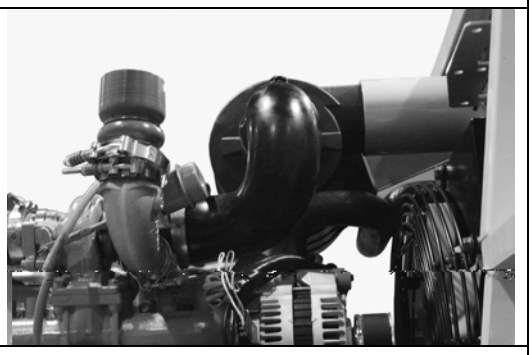
Disconnect the fuel line quick connect fitting.		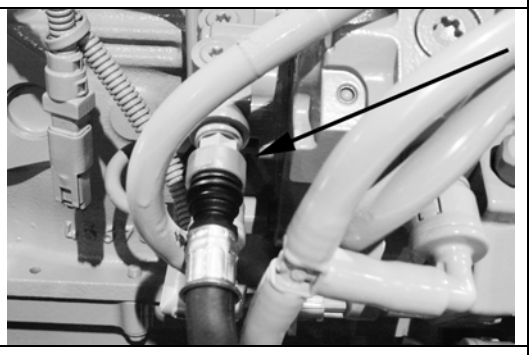
Disconnect the ECM connector from the engine.		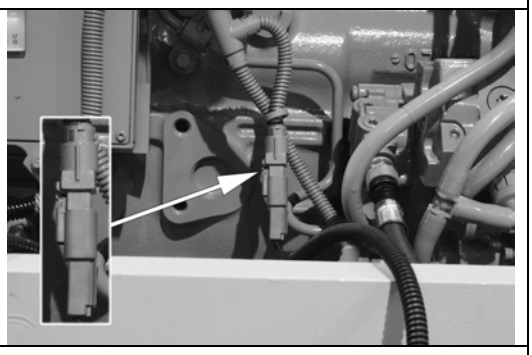

WARNING **The cable is factory adjusted. Do not loosen the locking nuts. Personal injury and equipment damage can result from a cable that is not adjusted correctly.** Remove the nut from the back of the directional control cable connection assembly. Move the directional control cable away from the directional control valve bracket.		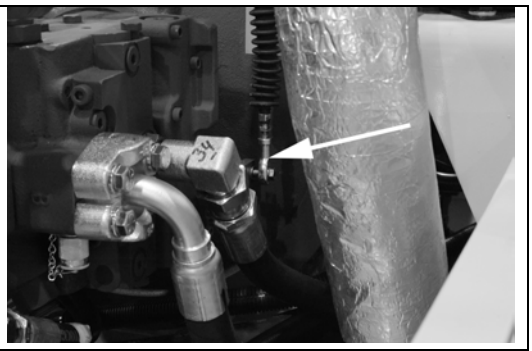
WARNING **The cable is factory adjusted. Do not loosen the locking nuts. Personal injury and equipment damage can result from a cable that is not adjusted correctly.** Loosen the directional control cable nut. Slide the cable out of the bracket.		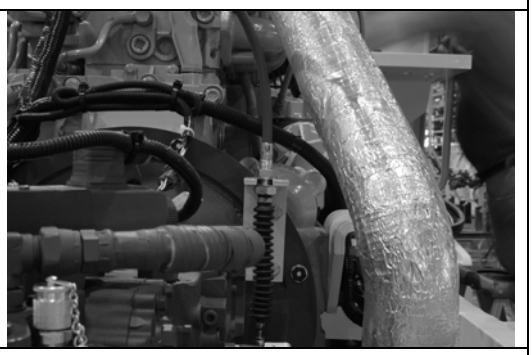
WARNING **Hydraulic fluid is under pressure. To reduce the possibility of personal injury, vent the hydraulic system prior to loosening a fitting or loosening or removing a hose.** Disconnect the hydraulic hoses from the right side of the front pump.		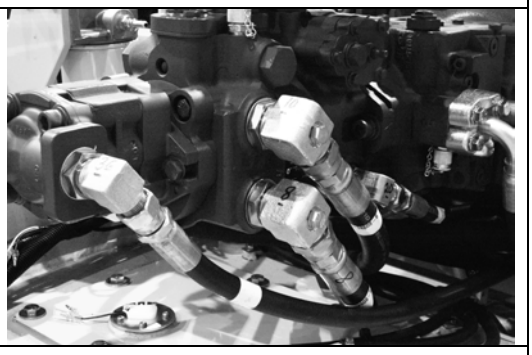
Disconnect the hydraulic hoses from the left side of the front pump.		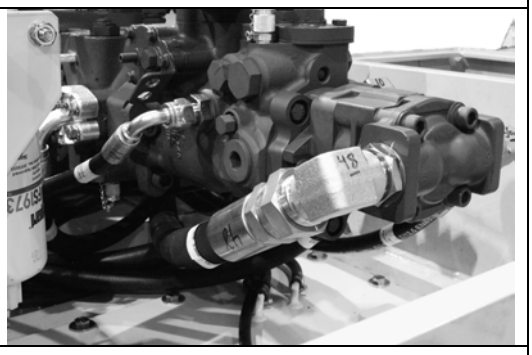

Disconnect the hydraulic hoses from the left side of the rear pump.		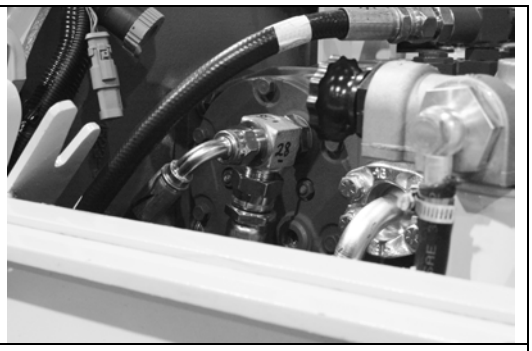
Disconnect the hydraulic hoses from the right rear pump.		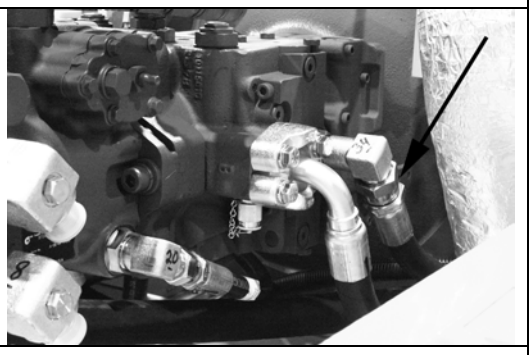
WARNING **This component requires a hoist to move. To reduce the possibility of personal injury, always use the lifting equipment that has proper capacity.** Connect the lifting chain to engine.		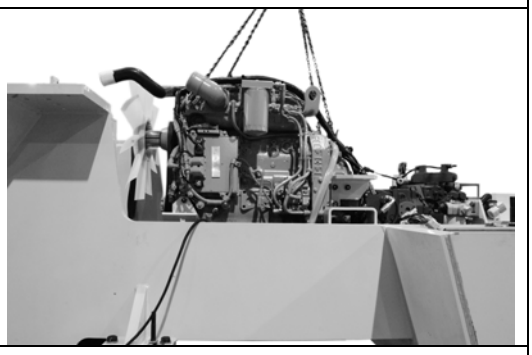
WARNING **To reduce the possibility of burns, stay alert for hot parts on components that have just been turned off.** Remove the rear engine mounting bolts from the engine.		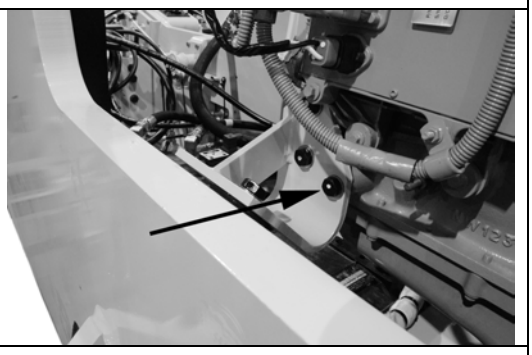

Remove the front engine mounting bolts from the engine. Remove the engine from the frame.		
Remove the rear engine mount mounting bolts from the frame. Remove the rear engine mount.		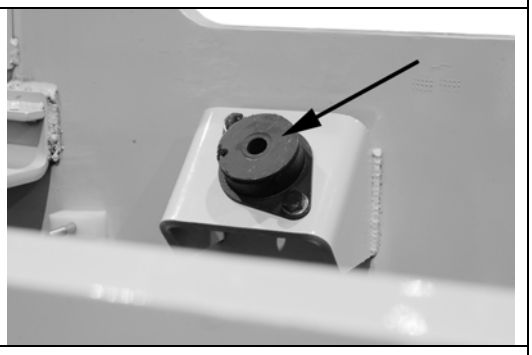
Remove the front engine mount mounting bolts from the frame. Remove the front engine mount.		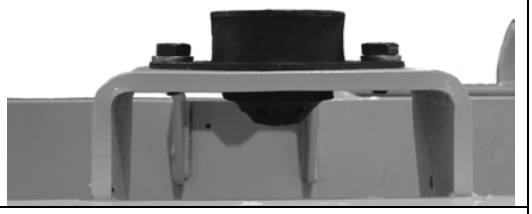
Disassemble Disconnect the pump solenoid connector from the harness connector.		

Remove the hose that connects the vibration pump to the propulsion pump.		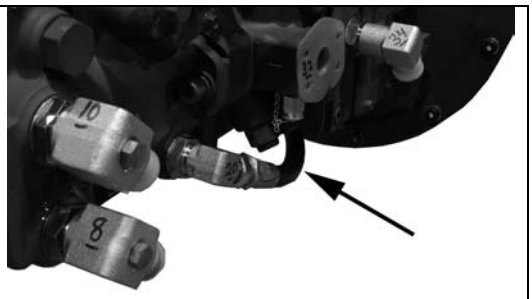
WARNING **The cable is factory adjusted. Do not loosen the locking nuts. Personal injury and equipment damage can result from a cable that is not adjusted correctly.** Remove the directional control cable bracket bolts and washers. Remove the bracket and spacers.		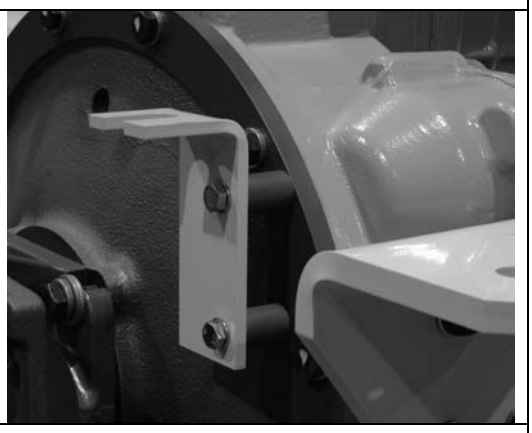
WARNING **This component requires a hoist to move. To reduce the possibility of personal injury, always use the lifting equipment that has proper capacity.** Attach a lifting device to the pump. Remove two bolts and washers. Install alignment studs. Remove remaining bolts and washers. Slide pump out of plastic flange.		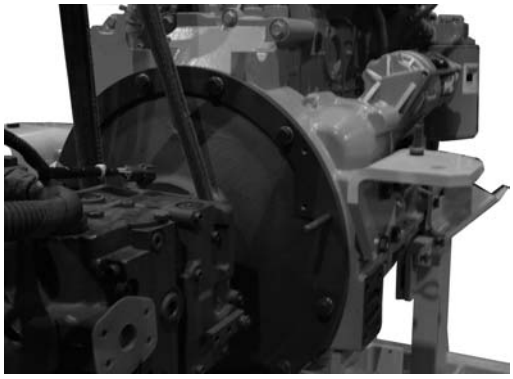

Remove plastic flange Allen head bolts and washers. Remove the plastic flange.		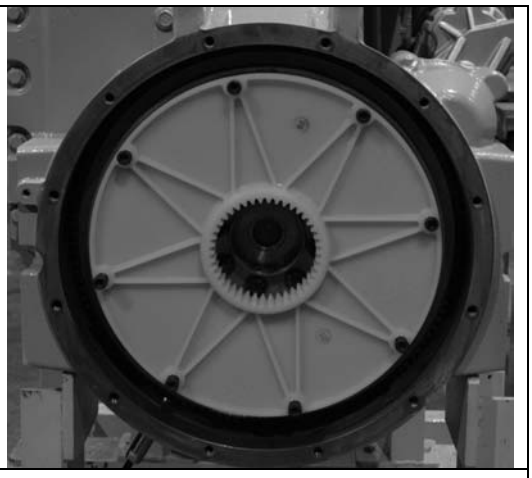
Remove the engine plate mounting bolts and washers. Remove the engine plate.		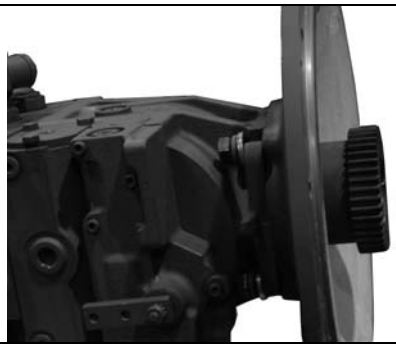
Loosen the Allen head bolt in the pump drive gear. Slide the drive gear off of the pump shaft.		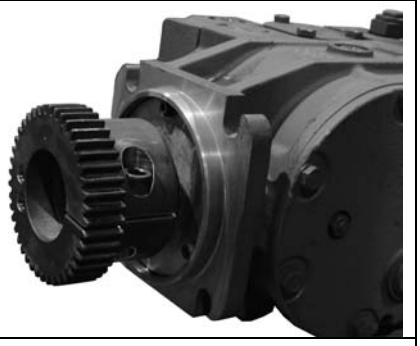
Assemble Slide the drive gear onto the pump shaft. Adjust the gear to 31 mm (1.22 in) between the back of the drive gear and the front of the pump. Tighten the Allen head bolt. Torque: 120 N·m (89 ft-lb).		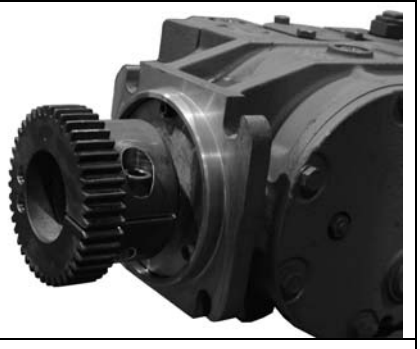

Place the engine plate over the gear and onto the pump. Align the 8 mm (0.31 in) holes in the 9 and 10 o'clock positions.		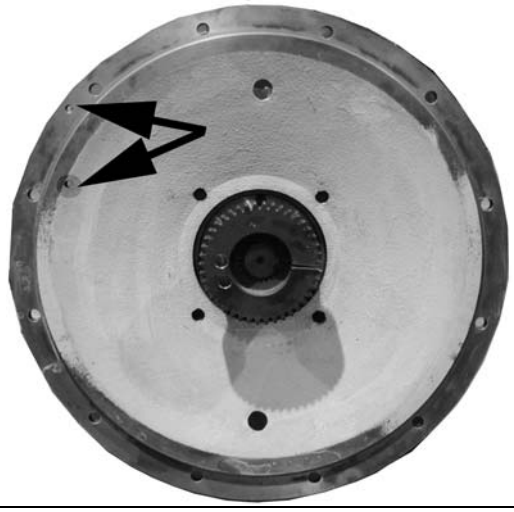
Thread the bolts with washers into the engine plate. Tighten the bolts. Torque: 167 N·m (123 ft-lb).		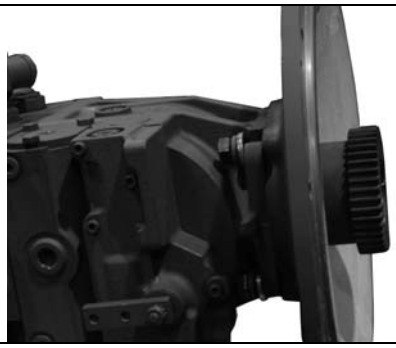
Place the plastic flange onto the flywheel. Align the plastic flange mounting holes. Thread in Allen head bolts with washers. Tighten the bolts. Torque: 49 N·m (36 ft-lb).		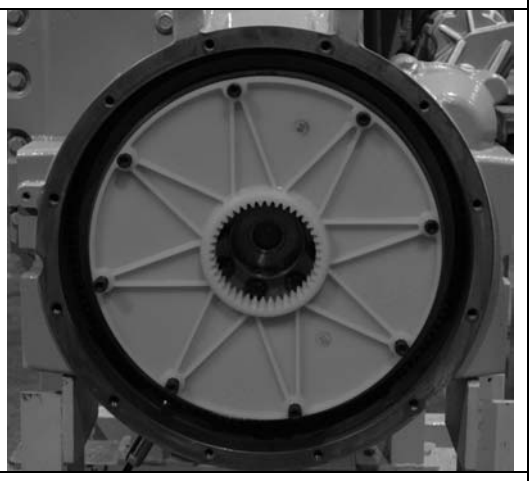

Thread in alignment studs as shown in illustration.		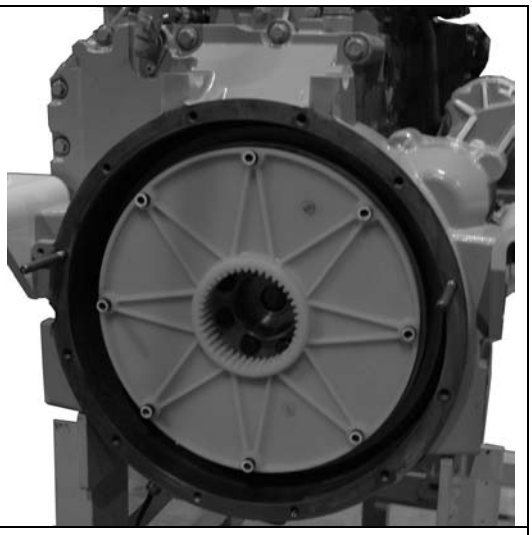
WARNING **This component requires a hoist to move. To reduce the possibility of personal injury, always use the lifting equipment that has proper capacity.** Attach a lifting device to the pump. Slide the pump into the flywheel housing until the drive gear touches the plastic flange. Align the drive gear to the plastic flange by turning the engine over by hand. Slide the pump flush with the flywheel. Install all bolts and washers. Tighten bolts Torque: 59 N·m (44 ft-lb).		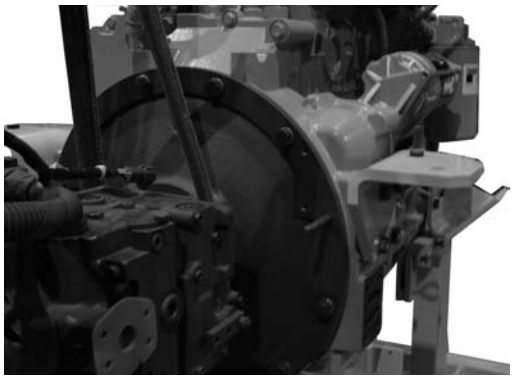
Place bolts with washers through the directional control cable bracket. Slide spacers onto the bolts. Align the bolts with the flywheel housing. Thread in the bolts. Tighten the bolts.		

Install the vibration pump to propulsion pump hose. Tighten the fittings.		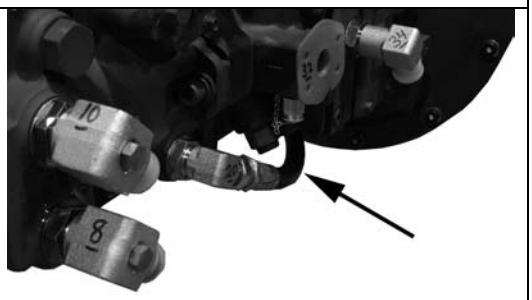
Connect the pump solenoid connector to the harness connector.		
Install There are two front engine mounts, one located on the left and one located on the right side. Place the front engine mount on the frame bracket. Align the engine mount holes with holes in the frame. Install the bolts. Tighten the bolts. Repeat the process for the remaining side.		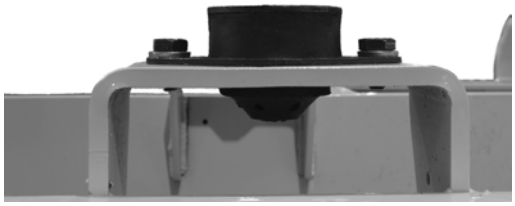
There are two rear engine mounts, one located on the left and one located on the right side. Place the rear engine mount on the frame bracket. Align the engine mount holes with holes in the frame bracket. Install the bolts. Tighten the bolts. Repeat the process for the remaining side.		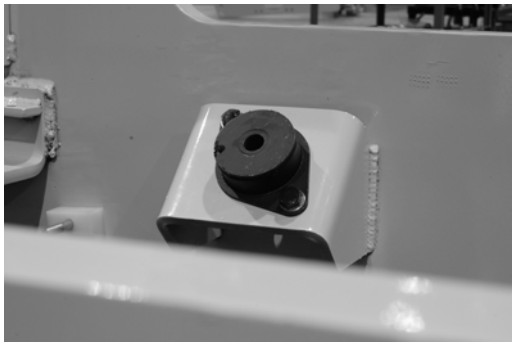

Lower the engine onto the rear mounts aligning the holes in the engine mount with the compactor mount. Thread the bolts into the compactor mount. Tighten the bolts.		
Align the front engine mount bracket holes with the engine and the compactor frame rail. Thread and finger tighten all bolts. Tighten the bolts. Repeat the process for the remaining side. Remove the lifting device.		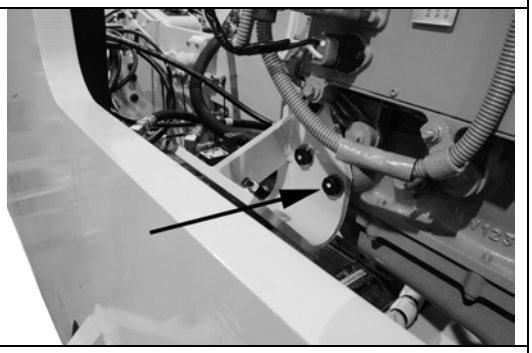
The fuel supply hose to the fuel pump has a quick connect fitting. Connect the fuel pump fuel supply hose.		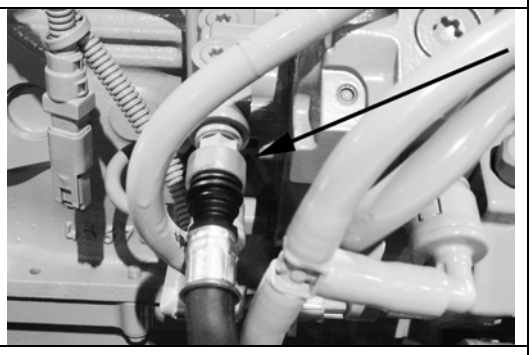
Air is supplied to the turbocharger compressor by use of a rubber boot. The boot attaches to the air cleaner and to the turbocharger housing at the compressor wheel inlet. Place clamps on the rubber boot. Install the boot on the air cleaner and turbocharger compressor housing. Tighten the clamps.		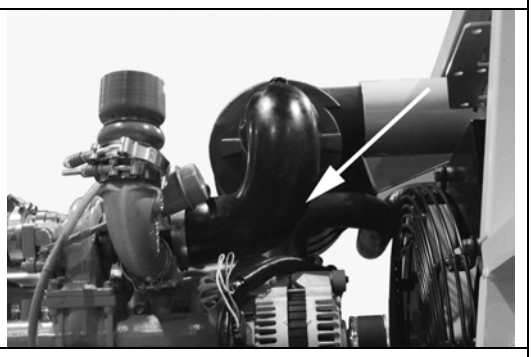

Slide the cooler tube into the breather box. Slide two hose clamps onto the intake manifold hose. Slide one end of the hose onto the tube. Tighten the hose clamp.		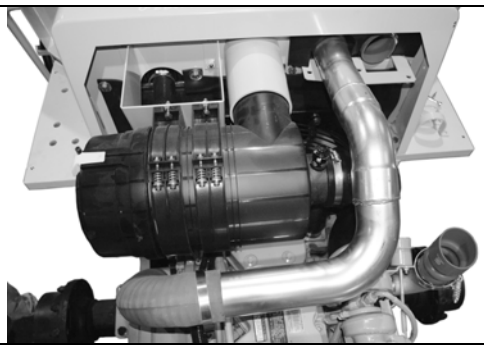
Slide a clamp onto the turbocharger compressor-housing boot. Slide the tube that connects the turbocharger compressor housing to the cooler into the rubber boot of the turbocharger. **Note: See above photo for clamp location.** Place the tube hold bracket over the tube and align the holes. Thread bolts into the holes. Tight the bolts.		
Connect the ECM connector.		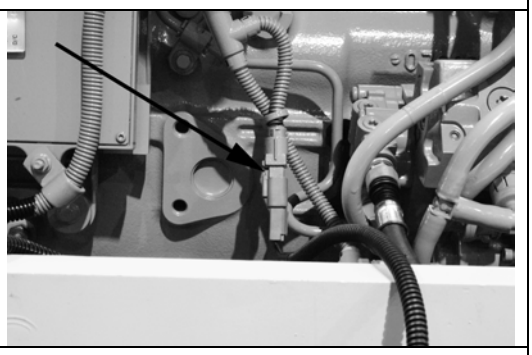
WARNING **To reduce the possibility of arcing, remove the Negative (-) battery cable first and attach the Negative (-) battery cable last. Batteries can emit explosive gases. To reduce the possibility of personal injury, always ventilate the compartment before servicing the batteries.** Connect the positive battery cables. Tighten the connectors. Connect the negative battery cables.		

Tighten the connectors. Lightly grease terminals to reduce corrosion. Place the rubber caps over the battery terminals. Install the battery box cover.		
Some of the hydraulic supply hoses are of the split flange and o-ring style. Apply grease to the o-ring. Place the o-ring into the groove in the fitting on the end of the hose. Make sure the o-ring is not twisted and fits properly in the groove.		
Align one flange on the left rear pump and thread in two bolts. Do not tighten the bolts. Slide the hydraulic hose, with the o-ring installed into the lower flange.		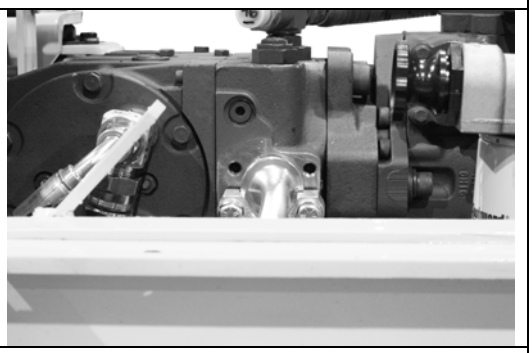
Align the upper flange with the holes in the left rear pump. Thread in the two top bolts. Make sure the hose fitting is setting flush. Tighten the four bolts equally. Torque: 80 N•m (59 ft-lb).		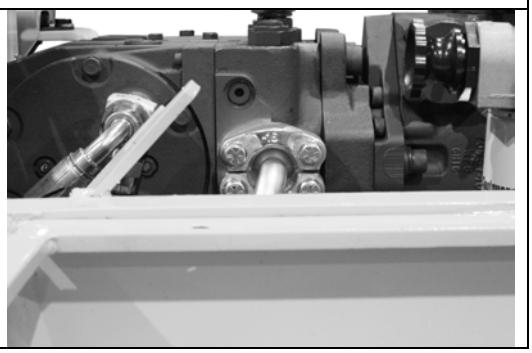

For the flanged style hydraulic hose on right rear pump: • Align one flange on the left rear pump and thread in two bolts. • Do not tighten the bolts. • Slide the hydraulic hose, with the o-ring installed into the lower flange. • Align the upper flange with the holes in the left rear pump. • Thread in the two top bolts. • Make sure the hose fitting is setting flush. • Tighten the four bolts equally. Torque: 80 N•m (59 ft-lb). Install the remaining JIC style hydraulic hoses.		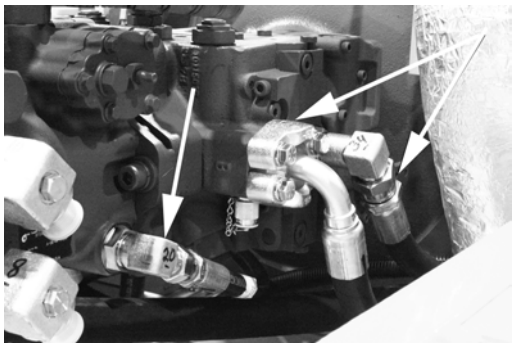
Install the JIC style hydraulic hoses on the left rear hydraulic pump.		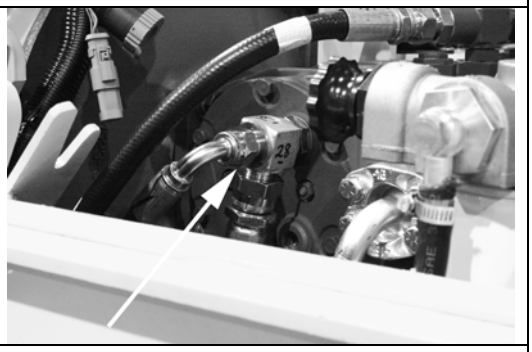
Install the JIC style hydraulic hoses on the left front pump.		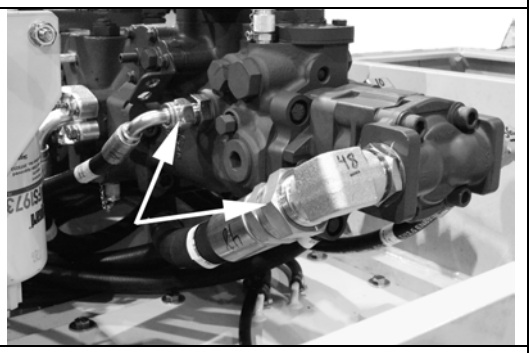

Install the JIC style hydraulic hoses on the right front hydraulic pump.		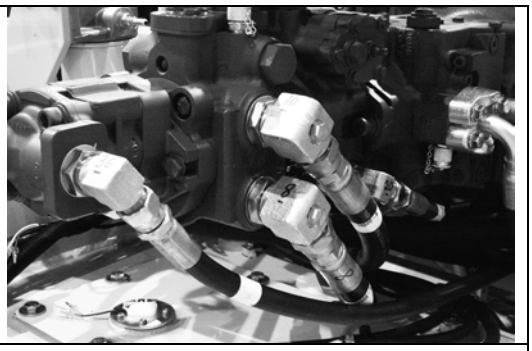
Secure all hoses for the front and rear pumps with cable ties.		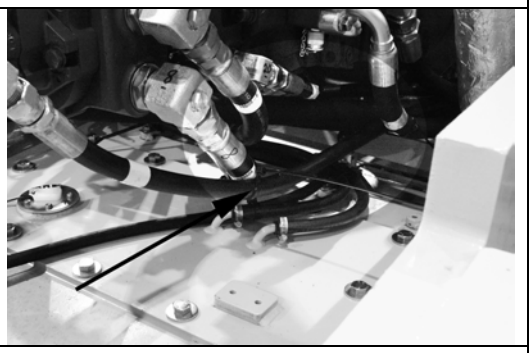
Place a bolt through the directional control cable. Slide a spacer onto the bolt. Attach the cable assembly to the bracket. Thread a nut with a flat washer onto the bolt. Tighten the nut.		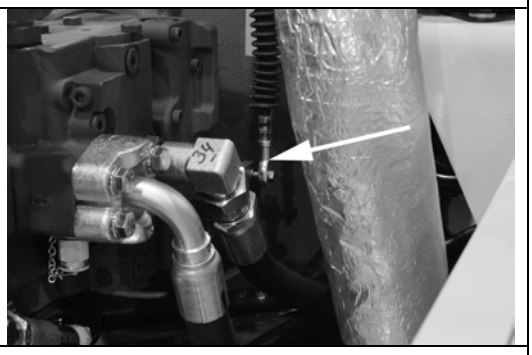
Thread the nut on the directional cable down. Place the directional control cable into the bracket. Tighten the nut.		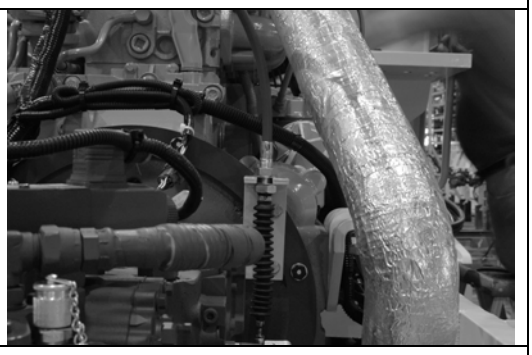

WARNING **This component requires a hoist to move. To reduce the possibility of personal injury, always use lifting equipment that has proper capacity.** Position the hood over the rear frame. Lower the hood onto the rear frame.		
Align the rear right hinge holes with the rear frame holes. Thread the bolts into the rear right hinge. Align the rear left hinge holes with the rear frame holes. Thread the bolts into the left hinge. Tighten the left and right hinge bolts.		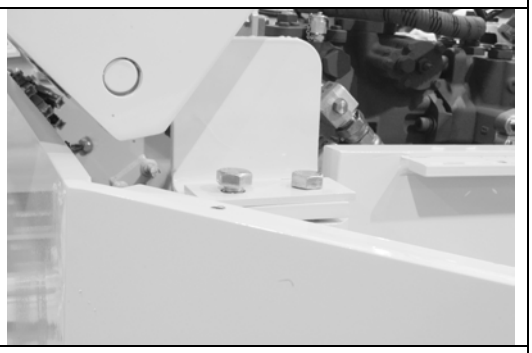
Place the hood assist cylinder onto the hood dowel and the frame down. Place a washer onto the hood dowel and insert a spring clip. Place a washer onto the frame dowel and insert a spring clip.		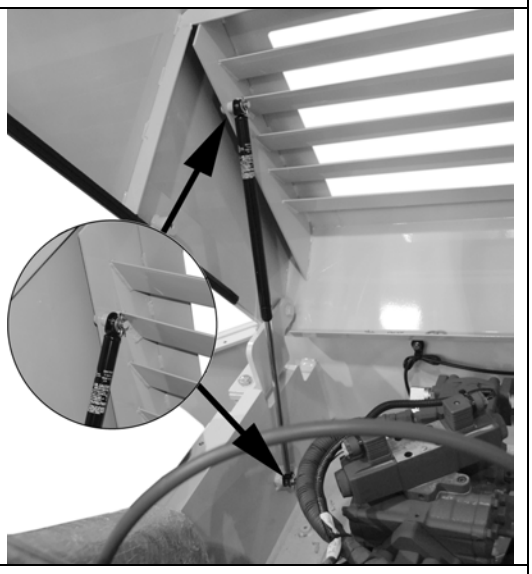
The frame and hood are threaded for a safety chain. Thread a bolt with a flat washer through the chain and into the hood. Thread a bolt with a flat washer through the chain and into the frame. Tighten the bolts.		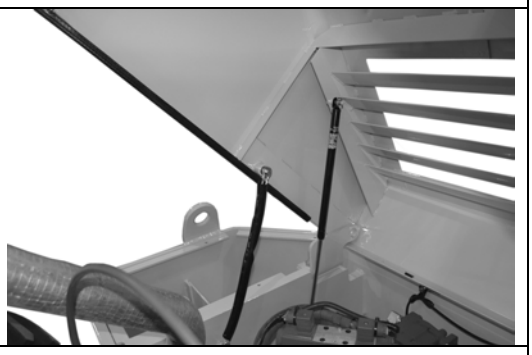

Rear End **Remove** Remove lug nuts from wheel and support the frame with studs.		
WARNING **This component or assembly weighs greater than 23 kg [50 lb]. To prevent serious personal injury, be sure to have assistance or use appropriate lifting equipment to lift this component or assembly.** Remove rubber tire from compactor.		
Record the location of the rear end hydraulic hoses. Remove the hydraulic hoses from the rear end.		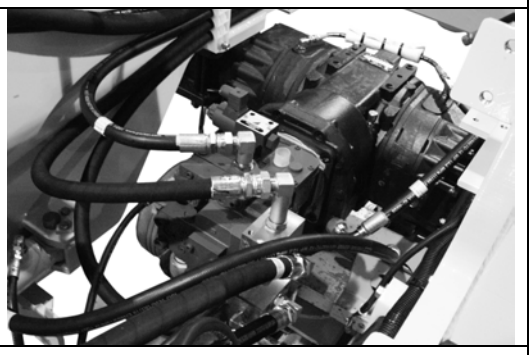
WARNING **This component requires a hoist to move. To reduce the possibility of personal injury, always use the lifting equipment that has proper capacity.** Support the frame with stands. Support the rear end with jacks. Remove the bracket nuts.		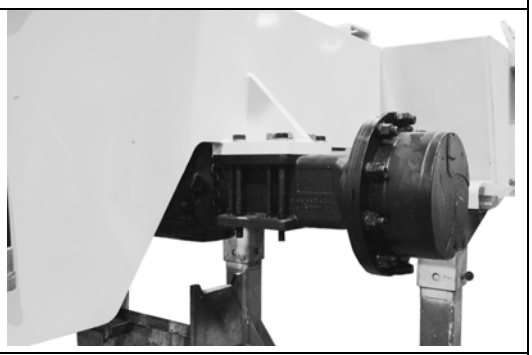

Lower the rear end.		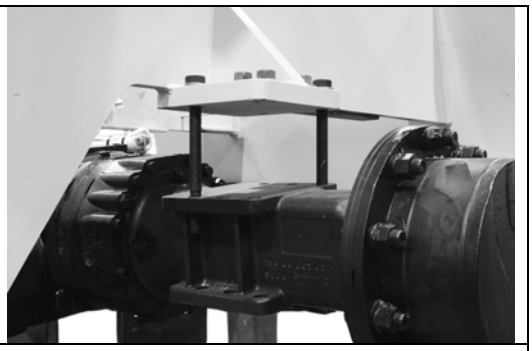
Install **WARNING** **This component requires a hoist to move. To reduce the possibility of personal injury, always use lifting equipment that has proper capacity**. Make sure the rear frame is secured on stands. The frame has one rear end bracket for each side. Each bracket has 4 holes. Insert two bolts in each bracket as illustrated in the artwork. Position the rear end under the rear frame and align with the bolts.		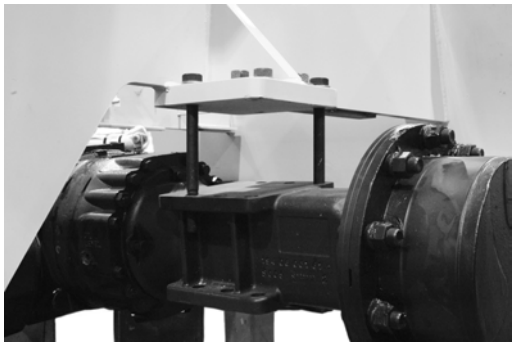
Raise the rear end until it sets flush against the brackets. Install the remaining bolts into each bracket.		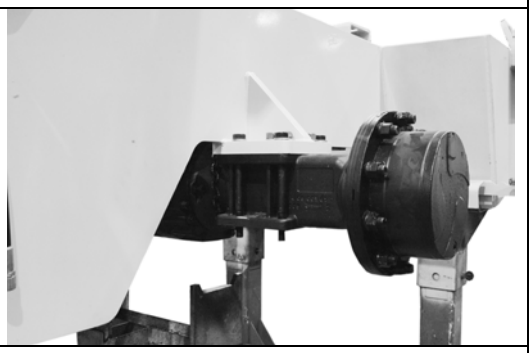
Install the nuts and lock washers. Tighten the nuts. Torque: 540 N·m (399 ft-lb). Remove the jacks.		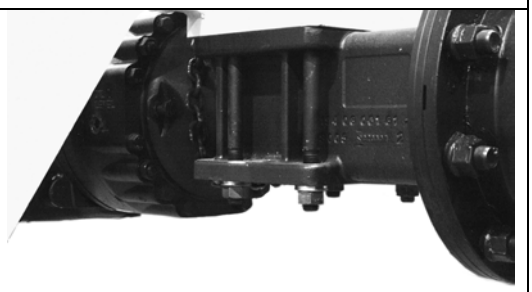

Connect the hydraulic hoses to the manifold on the rear end.		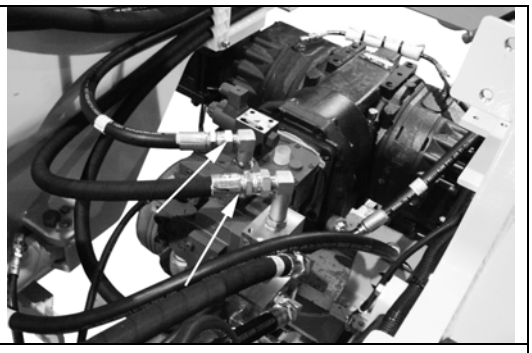
WARNING **This component or assembly weighs greater than 23 kg [50 lb]. To reduce the possibility of personal injury, get assistance or use appropriate lifting equipment.** Align the tire mounting holes with the studs**.** Lift the tire onto the studs.		
Make sure the tire sets flush against the drum. Thread the lug nuts onto the studs. Tighten the lug nuts in the sequence noted in the photo.		
Back Up Alarm **Remove** The backup alarm is located under the hood at the rear of the compactor. Raise and secure the hood. Record the locations of the wires. Remove the nuts and wires from the terminal posts. Remove the mounting bolts and back up alarm.		

Install Align the mounting holes in the back up alarm with the compactor frame. Install and tighten the bolts. Install the wires and thread the nuts onto the back up alarm terminal posts. Close the hood.		
Starter Relay **Remove** The starter relay is located under the hood on the right side of the compactor. Key switch to OFF position. Raise and secure the hood. Record the location of the wires. Connect the wires.		
The starter relay is mounted to a bracket that mounts to the compactor frame. Remove the nuts that starter relay mounting nuts.		
Remove the rubber isolators from the starter relay.		

Install Place the rubber isolators onto the starter relay studs.		
Slide the starter relay up into the bracket and install the nuts. Connect the wires. Shut the hood.		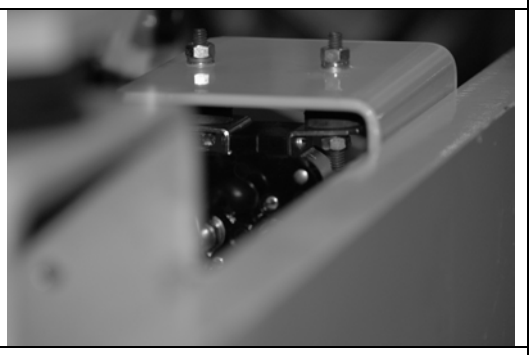
Engine Speed Change Switch **Remove** Remove the console front cover to gain access to the back of the engine speed change switch.		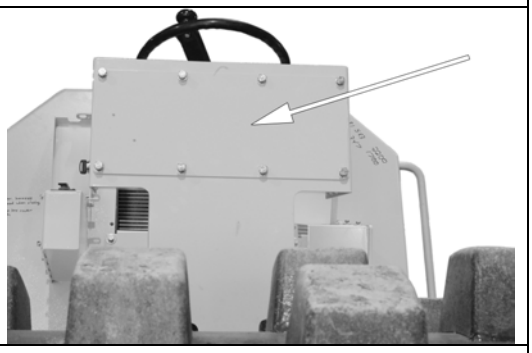
Record the location of the wires on the engine speed change switch. Disconnect the wires.		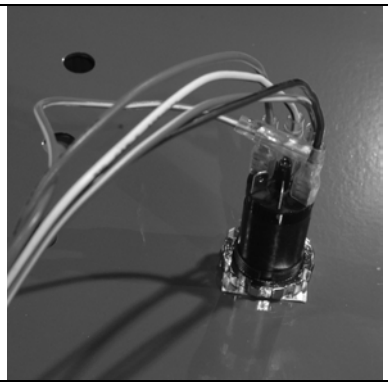

Remove the nut from the engine speed change switch. Slide the spacer off of the engine speed change switch.		
Slide the engine speed change switch out front of the dash panel.		
Install Slide the engine speed change switch into front of the dash panel.		
Slide the spacer onto the engine speed switch. Install the nut and tighten.		

Connect the engine speed switch wires.		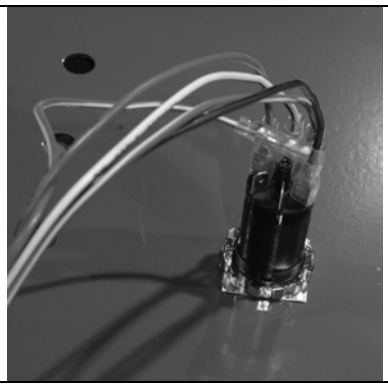
Align the front dash cover with the dash. Install the bolts. Tighten the bolts.		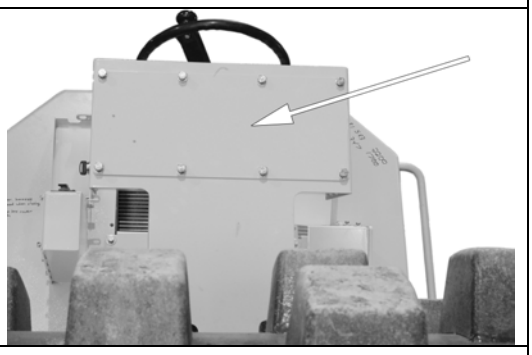
Forward/Reverse Lever Vibration Switch **Remove** Remove the cover bolts. Remove the cover.		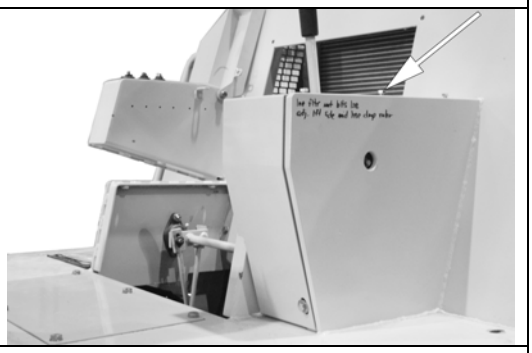
Disconnect the forward/reverse lever vibration switch cable connector.		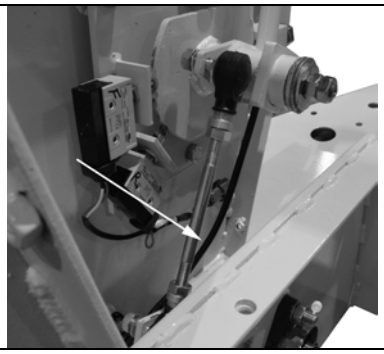

Loosen the forward/reverse lever handle mounting screw. Slide the cable out of the shifter tube.		
Install Slide the forward/reverse lever handle cable into the shifter tube. Position the handle so the vibration button is facing towards the operator. Tighten the mounting screw.		
Connect the forward/reverse lever vibration switch cable.		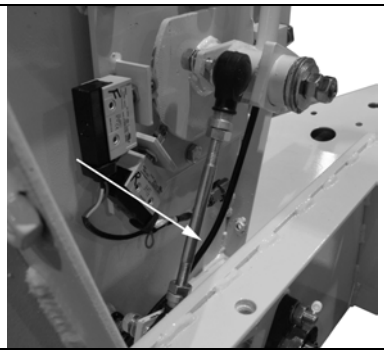
Install the cover. Align the mounting holes. Install and tighten the bolts.		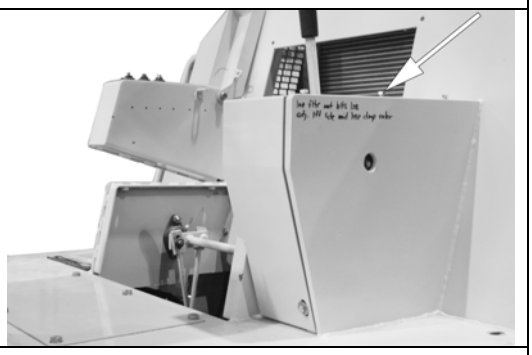

Fuses 65 Amp and Above

Remove

Main system fuses that are 65 amps and above are located under the hood at the rear of the compactor.

The fuses plug into the connector.

Unplug the faulty fuse.

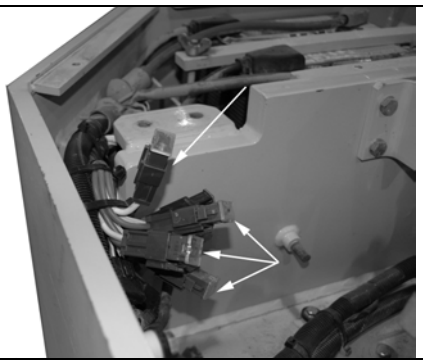

Install

Plug the fuse into the connector.

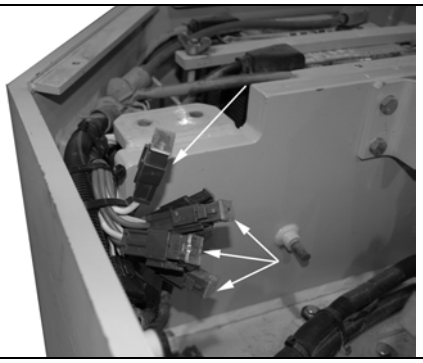

Parking Brake Valve

Remove

WARNING

Hydraulic fluid is under pressure. To reduce the possibility of personal injury, vent the hydraulic system prior to loosening a fitting or loosening removing a hose.

The parking brake valve is located on the rear left frame of the compactor.

Raise the hood.

Vent hydraulic pressure from parking brake valve.

Record location of hydraulic hoses and disconnect the hoses.

Record location of wires and disconnect the wires.

Remove parking brake valve mounting bolts.

Remove parking brake valve.

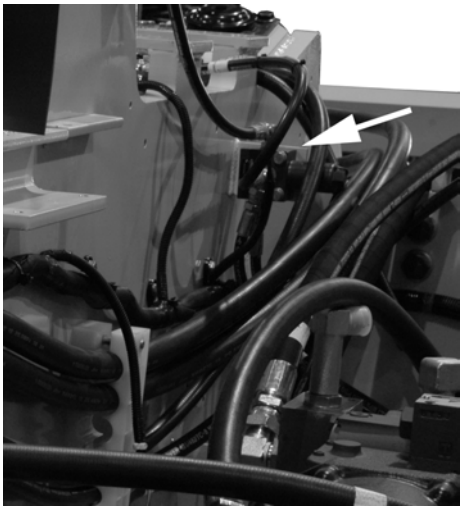

Align the parking brake valve with the frame holes. Thread in all mounting bolts. Tighten the bolts. Connect the wires. Connect the hydraulic hoses.		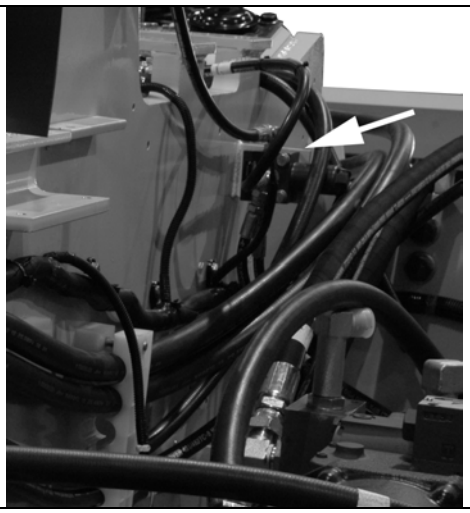
Vibration Amplitude Solenoid **Remove** **WARNING** **Hydraulic fluid is under pressure. To reduce the possibility of personal injury, vent the hydraulic system prior to loosening a fitting or loosening removing a hose.** The vibration amplitude solenoid is located on the vibration pump. Make sure the hydraulic system is not pressurized. Loosen the setscrews located in the top of the connectors. Unplug the connectors.		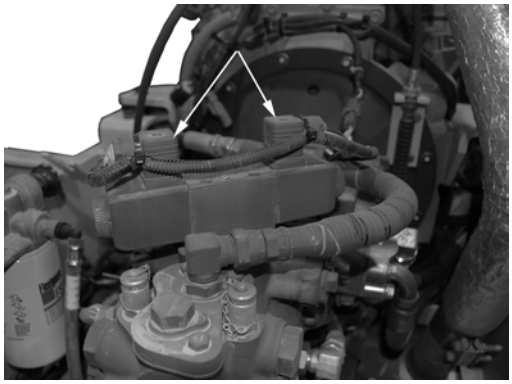
Remove the four mounting screws. Remove the vibration amplitude solenoid.		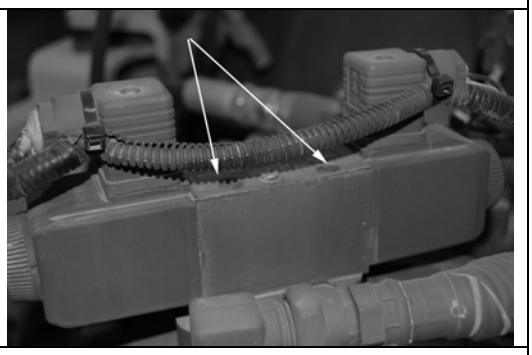

Install Place the vibration amplitude solenoid onto the vibration pump and align the holes. Install the screws. Tighten the screws.		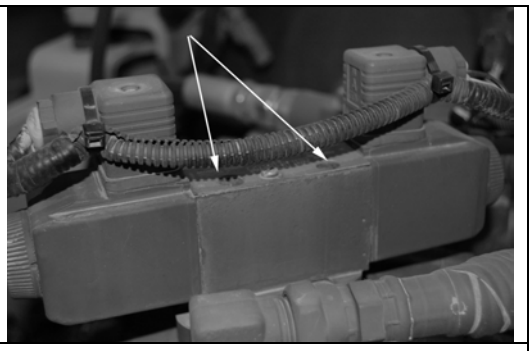
Plug the connectors onto the vibration amplitude solenoid. Tighten the connector screws.		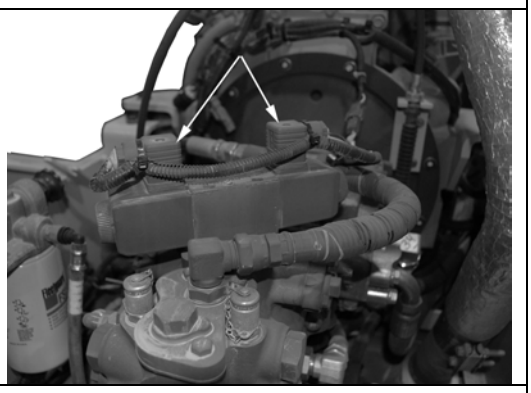
Compactor Speed Solenoid **Remove** **WARNING** **Hydraulic fluid is under pressure. To reduce the possibility of personal injury, vent the hydraulic system prior to loosening a fitting or loosening removing a hose.** The compactor speed solenoid is located on the propulsion motor Make sure the hydraulic system is not pressurized. Loosen the screw located in the top of the harness connector (left arrow) Unplug the connectors. Remove the mounting screws. Remove the compactor speed solenoid.		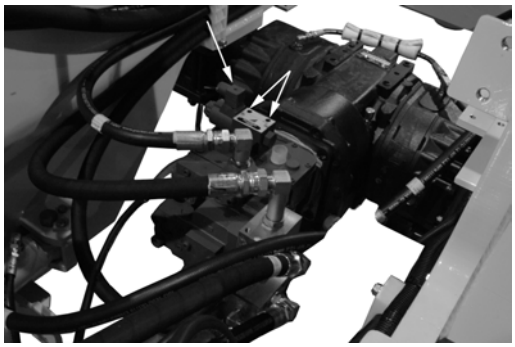

Install Place the compactor speed solenoid onto the propulsion motor and align the mounting holes. Install the mounting screws. Tighten the mounting screws. Connect the harness connector to the compactor speed solenoid. Tighten the connector screw.		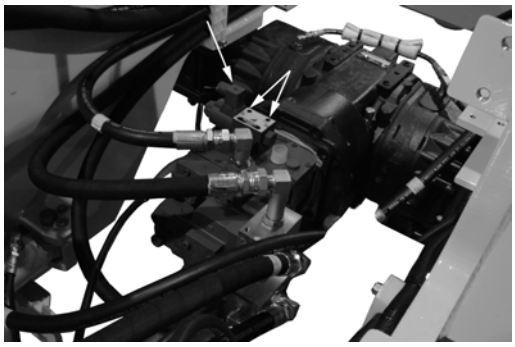
Orbitrol Steering Valve **Remove** **WARNING** **Hydraulic fluid is under pressure. To reduce the possibility of personal injury, vent the hydraulic system prior to loosening a fitting or loosening removing a hose.** The Orbitrol steering valve is located under the next to the horn under the compactor. Make sure the hydraulic system is not pressurized. Record the location of the hoses. Remove the hoses.		
. Remove the bolts from the steering column. Slide the Orbitrol off of the steering column.		

Remove the fittings.		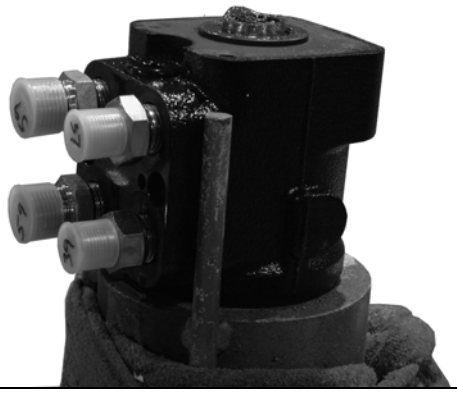
Install Lubricate fitting o-rings. Install the fittings. Tighten the fittings. Grease the splined drive.		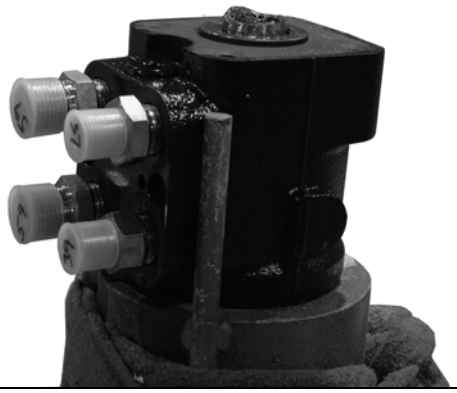
Place the Orbitrol steering valve onto the steering column aligning the mounting holes. Install the steering column bolts. Tighten the bolts.		

Connect the hoses.		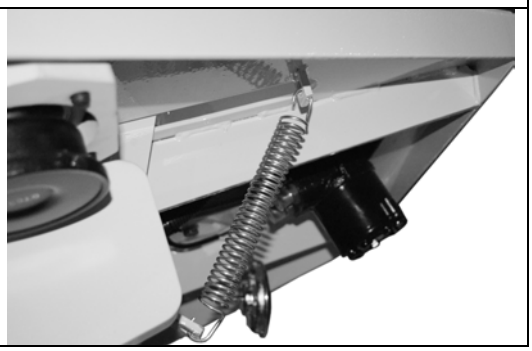

REVISIONS				
ZONE	REV	DESCRIPTION	DATE	APPROVED

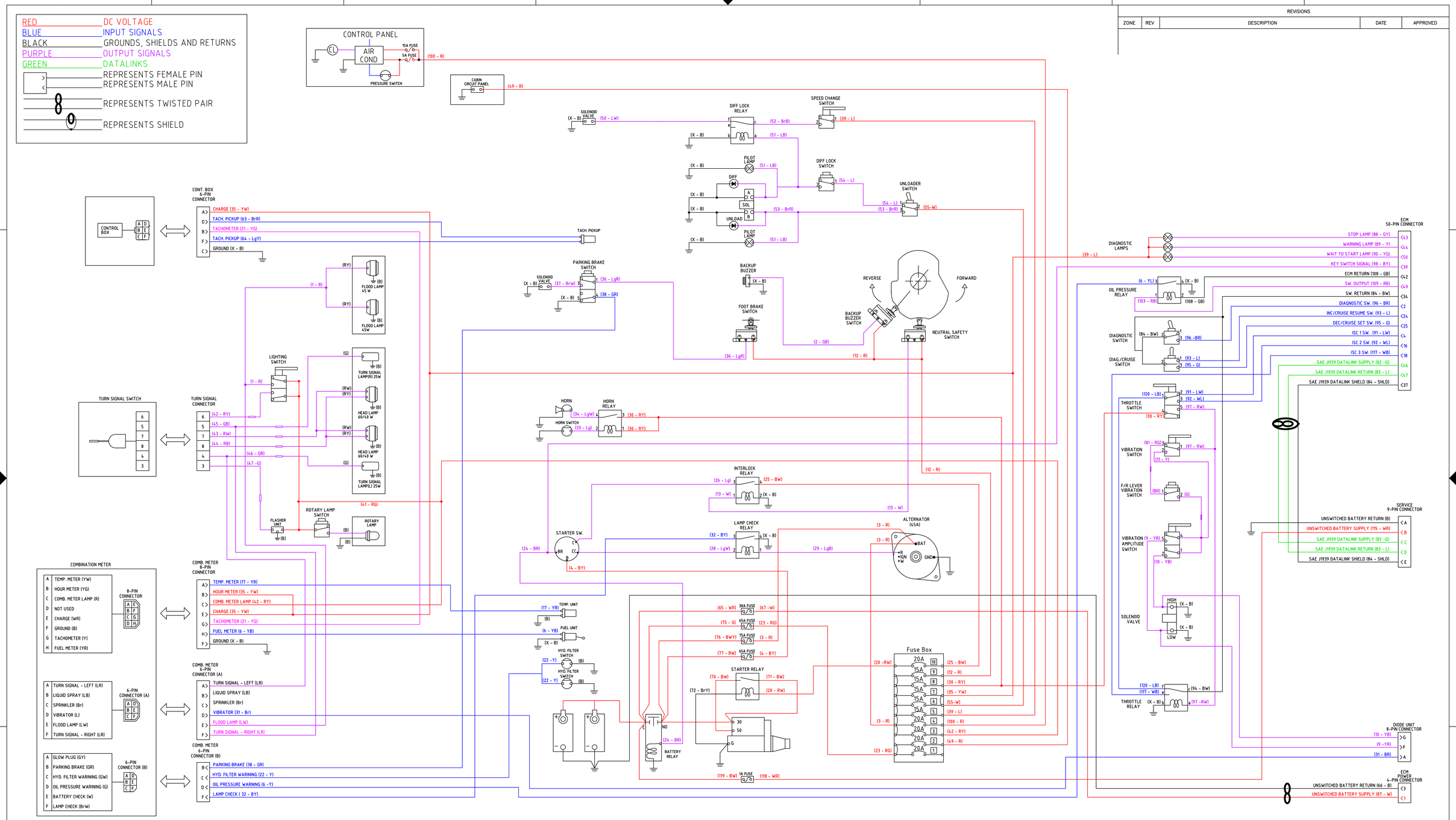

SAKAI SV 505

ELECTRICAL SYSTEM DRAWING

SIZE	FSCM NO.	DWG NO.	REV
D			A

SCALE NONE | SHEET 1

PARTS LIST				
KEY	QTY	PART NAME	PART NUMBER	NOTES
1	1	ENGINE	4032-39000-0	CUMMINS QSB4.5
2	1	FLANGE	4420-03000-0	KTR BoWeX 65 PLE-PA 11.5
3	1	HUB	4420-90000-0	KTR
4	1	PUMP	4218-77000-0	DAIKIN PV07546-613
5	1	ORBITROL	4216-46000-0	DAIKIN OSPC 400 ON
6	2	CYLINDER	4218-82000-0	P/S HYD. CYLINDER 070X035X380S7
7	2	FILTER	4218-71000-0	DONALDSON HMK04-6031
8	1	MOTOR	4216-76000-0	DAIKIN MV075-611
9	2	TIRE	4415-26000-0	GOODYEAR 23.1-26
10	1	AXLE ASSEMBLY	4418-68000-0	DANA
11	1	RADIATOR	4420-93000-0	CoPAR
12	1	FILTER	4207-79000-0	BUKO CT-08W
13	1	MOTOR	4216-48000-0	REXROTH A2FM45
14	1	MOTOR	4216-45000-0	DAIKIN BM75AC-40EH
15	1	VALVE	4217-36000-0	BOSCH DSL5140JG12
16	1	VALVE	3380-01019-0	SBS-210

REVISIONS				
ZONE	REV	DESCRIPTION	DATE	APPROVED

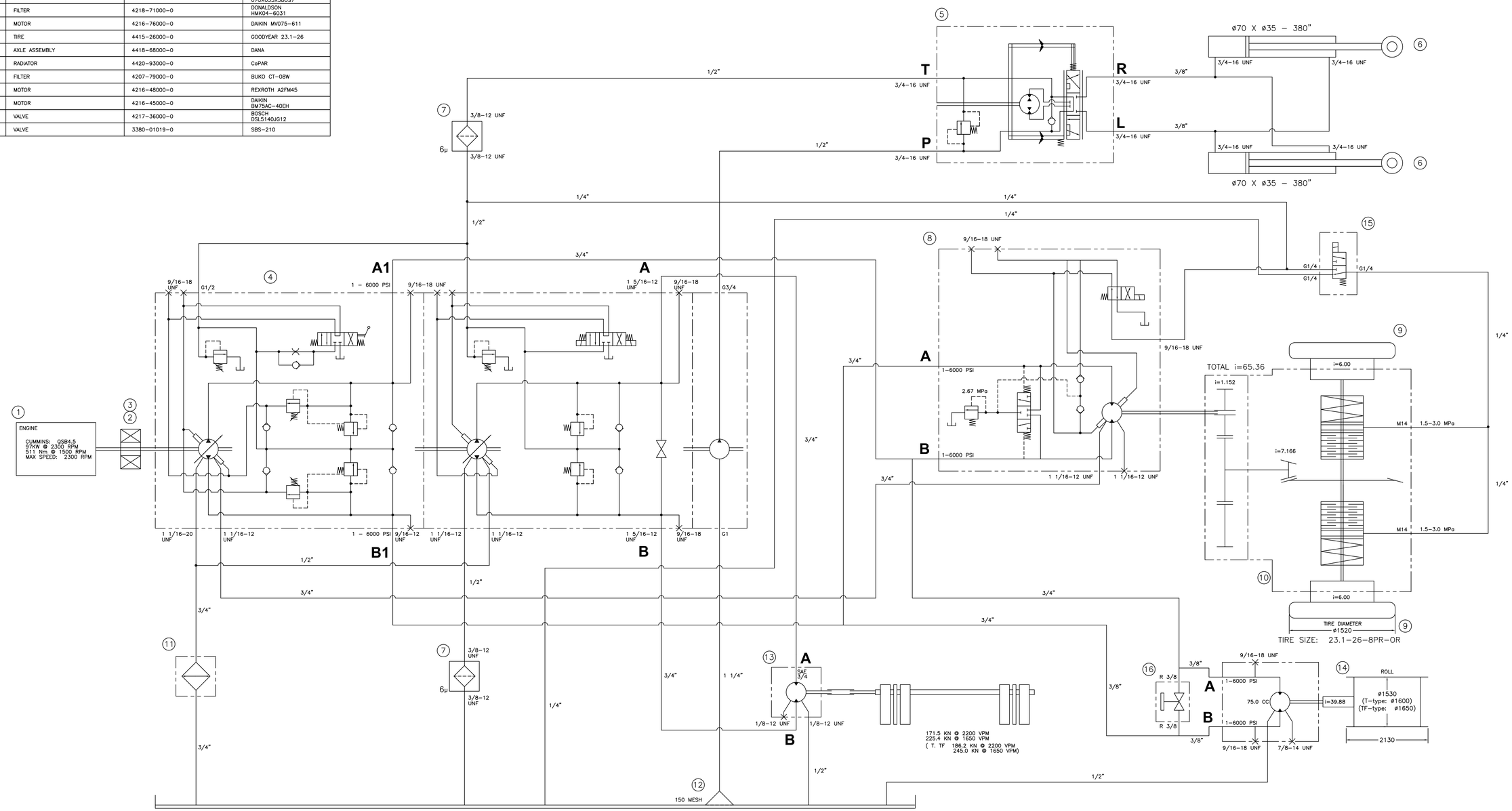

SAKAI SV 505

HYDRAULIC SYSTEM DRAWING

SIZE	FSCM NO.	DWG NO.	REV
D			A
SCALE NONE		SHEET 1	

8-2

Additional Service Literature

It is suggested the below listed service literature be purchased in order to maintain and repair the SV505 compactor.

Bulletin	Title of Publication
3379000	Air for Your Engine
3379001	Fuel for Cummins Engines Bulletin
3379009	Operation Cold Weather Bulletin
3810340	Cummins Engine Oil Recommendations
3666132	Coolant Requirements and Maintenance Bulletin
4021524	QSB4.5, QSB6.7, QSC8.3, and QSL9 CM850 Electronic Control Module Wiring Diagram
4021416	Troubleshooting and Repair Manual, CM850 Electronic Control System, ISB, ISBe4, QSB4.5, QSB5.9, QSB6.7, ISC, QSC8.3, ISL, and QSL9 Engines
4021271	Service Manual, ISB, ISBe4, and QSB (Common Rail Fuel System) Series Engines
MO193F10	DANA Maintenance and Repair Instruction Manual (Drive Axel Type 193)

General Specifications

Sv505D			
Weight			
Gross Weight		10,670 kg	23,525 lbs
Rear Axle		5,760 kg	12,700 lbs
Front Axle		4,910 kg	10,825 lbs
Dimension			
Overall length		5,740 mm	226”
Overall width		2,300 mm	91”
Overall height		2,870 mm	111”
Wheelbase		2,970 mm	117”
Wheel Front Pad		Roll (dia. x width)	
		1,530 x 2,130 mm	60” x 84”
Wheel Rear Tire		23.1– 26 – 8 PR (OR)	
Performance			
Travel Speed	1st	0 ~ 6 km/h	0 ~ 3.7 mile/h
	2nd	0 ~10 km/h	0 ~ 6.2 mile/h
Vibrating Power			
Gradability		62~	32~
Rolling width		2,130 mm	84”
Minimum turning radius		5.6 m	221”
Frequency		**Low**	**High**
		36.7 Hz {2,200 vpm}	27.5 Hz {1,650 vpm}
Centrifugal force		**Low**	**High**
		172 kN (38,581 lbs)	226 kN (50,706 lbs)
		17,500kgf	23,000kgf
Engine			
Model		CUMMINSQSB4.5Tier 3DieselEngine with turbo charger	
Total displacement		4.5 liters	274.6 cu.in
Rated output	97 kW	132 psi	2,300 min^{-1}
Max. torque		130 HP/2,300 rpm	
		511 N·m/1,500 min^{-1}	
		377 ft-lb/1,500 rpm	

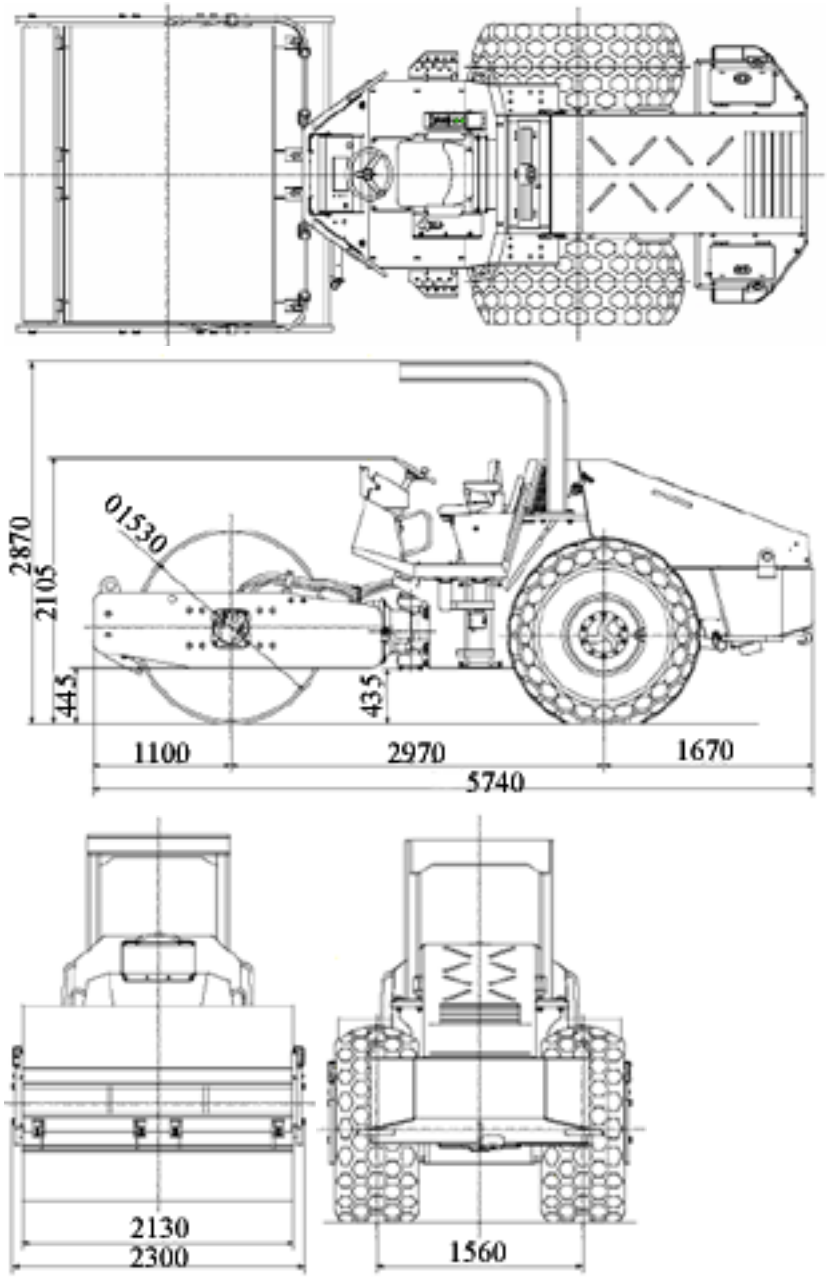

Model			
Sv505T			
Weight			
Gross Weight		11,030 kg	24,320 lbs
Rear Axle		6,110 kg	13,470 lbs
Front Axle		4,920 kg	10,850 lbs
Dimension			
Overall length		5760 mm	227”
Overall width		2,300 mm	91”
Overall height		2,890 mm	111”
Wheelbase		2,970 mm	117”
Wheel Front Pad		Roll (dia. x width)	
		1,600 x 2,130 mm	63” x 84”
Wheel Rear Tire		23.1– 26 – 8 PR (OR)	
Performance			
Travel Speed	1st	0 ~ 6 km/h	0 ~ 3.7 mile/h
	2nd	0 ~10 km/h	0 ~ 6.2 mile/h
Vibrating Power			
Gradability		62~	32~
Rolling width		2,130 mm	84”
Minimum turning radius		5.6 m	221”
Frequency		**Low**	**High**
		36.7 Hz {2,200 vpm}	27.5 Hz {1,650 vpm}
Centrifugal force		**Low**	**High**
		186 kN (41,887 lbs)	245 kN (55,115 lbs)
		19,000kgf	25,000kgf
Engine			
Model		CUMMINSQSB4.5Tier 3DieselEngine with turbo charger	
Total displacement		4.5 liters	274.6 cu.in
Rated output		97 kW	132 psi / 2,300 min^{-1}
Max. torque		130 HP/2,300 rpm	
		511 N·m/1,500 min^{-1}	
		377 ft-lb/1,500 rpm	

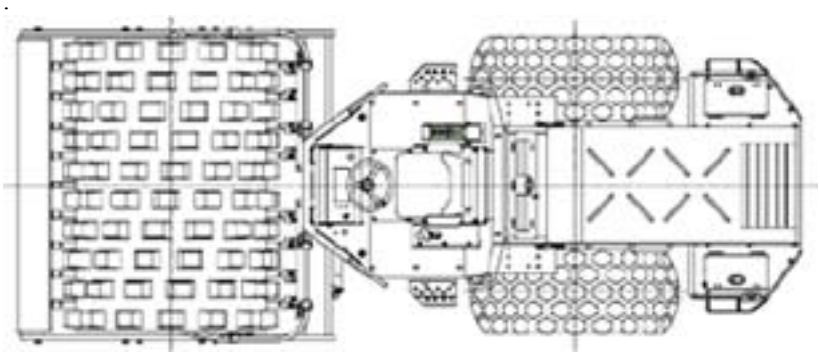

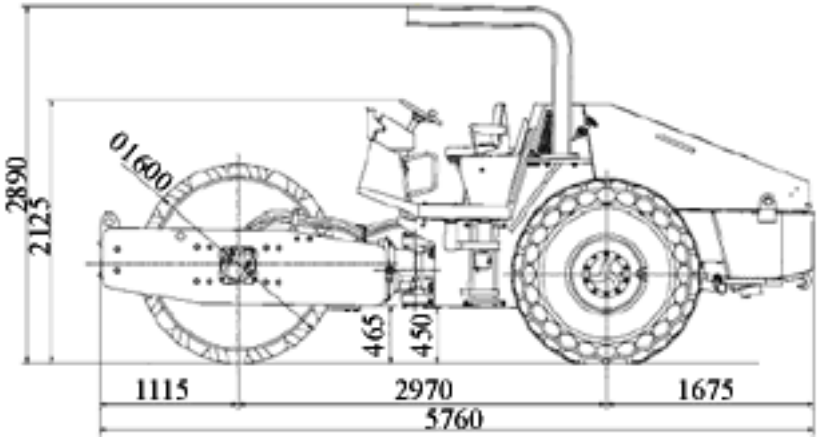

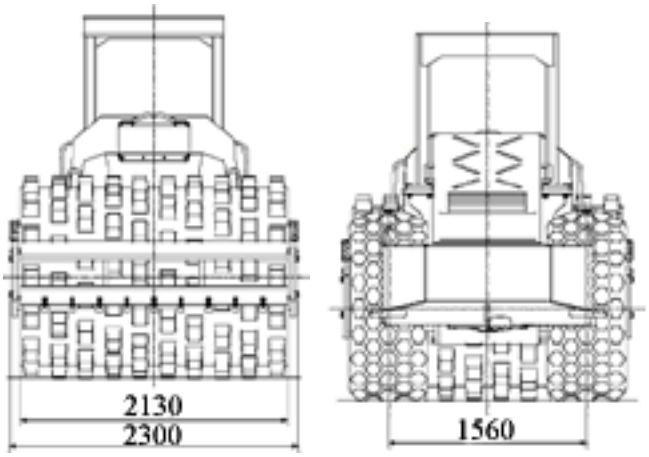

Model			
Sv505TF			
Weight			
Gross Weight		13,270 kg	29,255 lbs
Rear Axle		8,380 kg	18,475 lbs
Front Axle		4,890 kg	10,780 lbs
Dimension			
Overall length		5750 mm	226”
Overall width		2,300 mm	91”
Overall height		2,900 mm	112”
Wheelbase		2,970 mm	117”
Wheel Front Pad		Roll (dia. x width)	
		1,650 x 2,130 mm	65” x 84”
		1,600 x 2,130 mm	63” x 84”
Wheel Rear Tire		23.1– 26 – 8 PR (OR)	
Performance			
Travel Speed	1st	0 ~ 6 km/h	0 ~ 3.7 mile/h
	2nd	0 ~10 km/h	0 ~ 6.2 mile/h
Vibrating Power			
Gradability		62~	32~
Rolling width		2,130 mm	84”
Minimum turning radius		5.6 m	221”
Frequency		**Low**	**High**
		36.7 Hz {2,200 vpm}	27.5 Hz {1,650 vpm}
Centrifugal force		**Low**	**High**
		186 kN (41,887 lbs)	245 kN (55,115 lbs)
		19,000kgf	25,000kgf
Engine			
Model		CUMMINSQSB4.5Tier 3DieselEngine with turbo charger	
Total displacement		4.5 liters	274.6 cu.in
Rated output		97 kW 132 psi	2,300 min^{-1}
Max. torque		130 HP/2,300 rpm	
		511 N·m/1,500 min^{-1}	
		377 ft-lb/1,500 rpm	

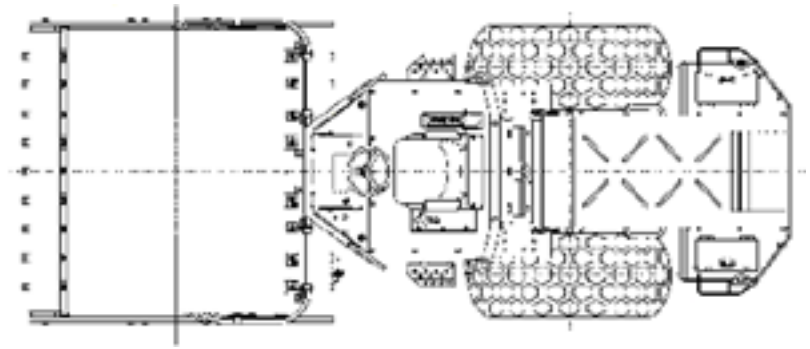

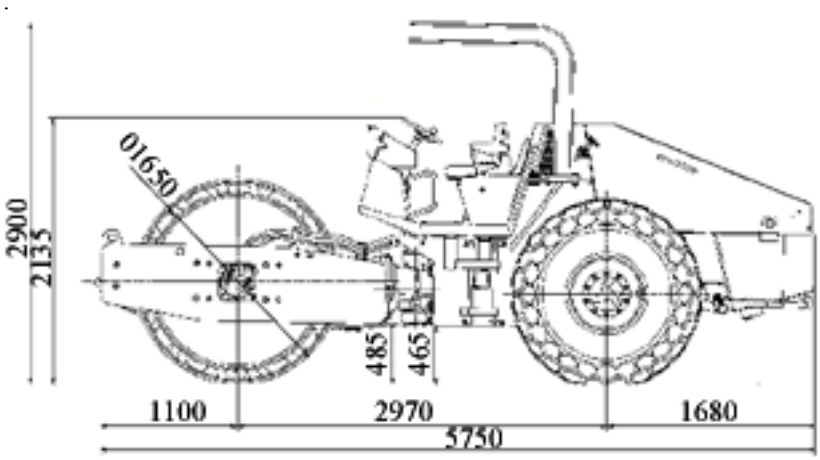

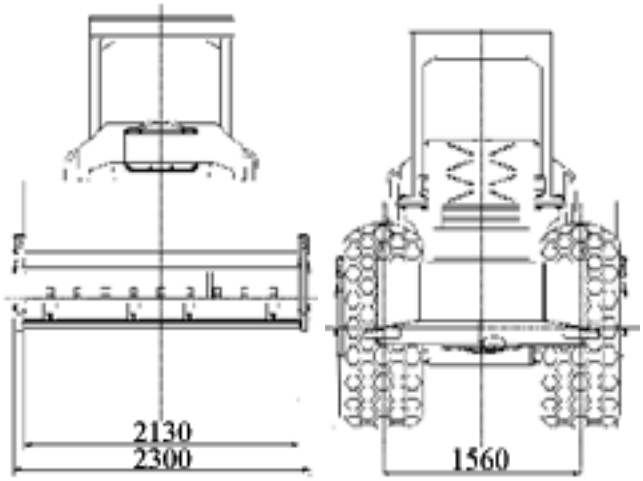

Compactor Overall Specifications					
Engine					
High Idle		Low Idle		Rated Speed	
2,300 ± $^{0}_{50\ rpm}$		800 ± 25 rpm		2,200 rpm	
Travel Speed					
Low			High		
0 ~ 3.7 ± 0.9 mph			0 ~ 6.2 ± 0.9 mph 50± 5˚C (122±41˚F)		
All Wheel Drive Type(Identical speed for forward and reverse travels)					
Hydraulic Pressure					
Propulsion		Vibrator		Steering Relief Pressure	Parking Brake Release Pressure
Main Circuit Pressure	Charge Circuit Pressure	Main Circuit Pressure	Charge Circuit Pressure		
41.8 to 38.8 MPa	2.4 to 2.1 MPa	25.0 to 23.5 MPa	2.4 to 2.1 MPa	15.0 to 13.8 MPa	2.4 to 2.1 MPa
6,070 to 5630 psi	340 to 300 psi	3,620 to 3,400 psi	340 to 300 psi	2,170 to 2,000 psi	340 to 300 psi
Note: The coolant temperature needle must be in the green zone of the meter and the hydraulic oil temperature must be 50± 5˚C (122±41˚F).					

Overall Coolant Levels	
Ambient temperature	Always
Amount of anti-freeze	8.8 ŏ(2.3 gal)
Amount of coolant	8.8 ŏ(2.3 gal)
Ratio	Factory Mix 80/20 (mix in accordance with ambient temperature)

Battery Electrolyte Reading				
Level of charge Percentage	**Ambient Temperature**			
	20°C (68°F)	0°C (32°F)	–10°C (14°F)	–20°C (–4°F)
100	1.28	1.29	1.30	1.31
90	1.26	1.27	1.28	1.29
80	1.24	1.25	1.26	1.27
75	1.23	1.24	1.25	1.26

Compactor Capacity			
Compartment	**Type of Fluid**	**Liters**	**Gallons**
Fuel tank	Diesel oil	250	66
Engine oil pan	Engine oil	11	2.9
Hydraulic tank	Hydraulic oil	50	13.2
Wheel motor	Gear oil	3.9	1.0
Radiator	Coolant	17.6	4.6
Vibrator	Gear oil	34	9.0
Transmission	Gear oil	2.0	0.5
Differential	Gear oil	9.5	2.5
Final drives	Gear oil	1.75 x 2	0.5 x 2

Fuel Oil and Grease Rating					
Lubricant	**Service Classification**	**Ambient Temp. and Applicable Viscosity Rating**			**Applicable Standards**
		–15 ~ 30°C (5 ~ 86°F)	**0 ~ 40°C (32 ~ 104°F)**	**15 ~ 55°C (59 ~ 131°F)**	
Engine oil	API grade CH-4	SAE 10W-30	SAE 15W-40	SAE 15W-40	MIL-L-2104B
Gear oil	API grade GL4	SAE 80W-90	SAE 90	SAE 140	MIL-L-2105
Hydraulic oil	Anti wear	ISO-VG32 over VI 140	ISO-VG46 over VI 140	ISO-VG68 over VI 110	ISO-3448
Grease	Lithium type extreme pressure				NLGI-2
Fuel	Diesel oil				ASTM D975-2D

Recommended Lubricants				
Lubricant Oil Company	**Lubricant Types**			
	Engine Oil API – CH – 4	**Gear Oil API GL 4**	**Hydraulic Oil VG 46**	**Grease (NLGI - II)**
CALTEX	N/A	Universal Thuban 90	Rando Oil HD 46	Martifack EP 2
BP	Vanellus C Extra	BP Gear Oil EP 90	BP Energol HLP 46	BP Energrease LS – EP 2
ESSO	N/A	Esso Gear Oil GP 90	Nuto H 46	Beacon EP 2
MOBIL	Delvac MX	Mobil Pegasus Gear Oil 90	Nuto Oil 25	Beacon EP 25
SHELL	Rim ula X	Shell Spirax 90 EP	Shell Tellus Oil 46	Shell Alvania EP Grease 2
CASTROL	Castrol GTX Diesel	Castrol Hypoy 90	Hyspin AWS 46	Spherrol ELP 2

Rear Drive Specifications

Bolt Torque						
Bolt Size	**Type or Bolt**					
	Grade 8.8 Loctite 242	Grade 8.8 Loctite 270	Grade 10.9 Loctite 242	Grade 10.9 Loctite 270	Grade 12.9 Loctite 242	Grade 12.9 Loctite 270
M6 x 1	9,5-10,5	10,5-11,5	14,3-15,7	15,2-16,8	16,2-17,8	18,1-20,0
M8 x 1,25	23,8-26,2	25,6-28,4	34,2-37,8	36,7-40,5	39,0-43,0	43,7-48,3
M10 x 1,5	48-53	52-58	68-75	73-81	80-88	88-97
M12 x 1,75	82-91	90-100	116-128	126-139	139-153	152-168
M14 x 2	129-143	143-158	182-202	200-221	221-244	238-263
M16 x 2	200-221	219-242	283-312	309-341	337-373	371-410
M18 x 2,5	276-305	299-331	390-431	428-473	466-515	509-562
M20 x 2,5	390-431	428-473	553-611	603-667	660-730	722-798
M22 x 2,5	523-578	575-635	746-824	817-903	893-987	974-1076
M24 x 3	675-746	732-809	950-1050	1040-1150	1140-1260	1240-1370
M27 x 3	998-1103	1088-1202	1411-1559	1539-1701	1710-1890	1838-2032
M30 x 3,5	1378-1523	1473-1628	1914-2115	2085-2305	2280-2520	2494-2757
M8x 1	25,7-28,3	27,5-30,5	36,2-39,8	40,0-44,0	42,8-47,2	47,5-52,5
M10 x 1,25	49,4-54,6	55,2-61,0	71,5-78,5	78,0-86,0	86,0-94,0	93,0-103,0
M12 x 1,25	90-100	98-109	128-142	139-154	152-168	166-184
M12 x 1,5	86-95	94-104	120-132	133-147	143-158	159-175
M14 x 1,5	143-158	157-173	200-222	219-242	238-263	261-289
M16 x 1,5	214-236	233-257	302-334	333-368	361-399	394-436
M18 x 1,5	312-345	342-378	442-489	485-536	527-583	580-641
M20 x 1,5	437-483	475-525	613-677	674-745	736-814	808-893
M22 x 1,5	581-642	637-704	822-908	903-998	998-1103	1078-1191
M24 x 2	741-819	808-893	1045-1155	1140-1260	1235-1365	1363-1507
M27 x 2	1083-1197	1178-1302	1520-1680	1672-1848	1834-2027	2000-2210
M30 x 2	1511-1670	1648-1822	2138-2363	2332-2577	2565-2835	2788-3082

Hydraulic Motor Specifications

Vibrator Motor Specifications				
Model	Displacement	Circuit Pressure Setting		
A10FM	44.5	25MPa	3260psi	255kgf/cm^2

Propulsion Motor Specifications						
Model	Displacement		Circuit Pressure Setting		Low Pressure Relief Valve Setting	
MV075-607	Min: 28cm^3/rev	Max: 75cm3/rev	41.8MPa	6,050psi	2.22 MPa	330psi

Metric to US Torque								
Capscrew Body Size	Cast Iron		Aluminum		Cast Iron		Aluminum	
	N•m	ft-lb	N•m	ft-lb	N•m	ft-lb	N•m	ft-lb
1/4 - 20	9	7	8	6	15	11	8	6
1/4 - 28	12	9	9	7	18	13	9	7
5/16 - 18	20	15	16	12	30	22	16	12
5/16 - 24	23	17	19	14	33	24	19	14
3/8 - 16	40	30	25	20	55	40	25	20
3/8 - 24	40	30	35	25	60	45	35	25
7/16 - 14	60	45	45	35	90	65	45	35
7/16 - 20	65	50	55	40	95	70	55	40
1/2 - 13	95	70	75	55	130	95	75	55
1/2 - 20	100	75	80	60	150	110	80	60
9/16 - 12	135	100	110	80	190	140	110	80
9/16 - 18	150	110	115	85	210	155	115	85
5/8 - 11	180	135	150	110	255	190	150	110
5/8 - 18	210	155	160	120	290	215	160	120
3/4 - 10	325	240	255	190	460	340	255	190
3/4 - 16	365	270	285	210	515	380	285	210
7/8 - 9	490	360	380	280	745	550	380	280
7/8 - 14	530	390	420	310	825	610	420	310
1 - 8	720	530	570	420	1100	820	570	420
1 - 14	800	590	650	480	1200	890	650	480

Metric to US Torque Values												
Body Size	Torque				Torque				Torque			
Diameter	Cast Iron		Aluminum		Cast Iron		Aluminum		Cast Iron		Aluminum	
mm	N•m	ft-lb	N•m	ft-lb	N•m	ft-lb	N•m	ft-lb	N•m	ft-lb	N•m	ft-lb
6	9	5	7	4	13	10	7	4	14	9	7	4
7	14	9	11	7	18	14	11	7	23	18	11	7
8	23	17	18	14	33	25	18	14	40	29	18	14
10	45	33	30	25	65	50	30	25	70	50	30	25
12	80	60	55	40	115	85	55	40	125	95	55	40
14	125	90	90	65	180	133	90	65	195	145	90	65
16	195	140	140	100	280	200	140	100	290	210	140	100
18	280	200	180	135	390	285	180	135	400	290	180	135
20	400	290	n/a	n/a	550	400	n/a	n/a	n/a	n/a	n/a	n/a

Fraction to Decimal to Millimeter Conversions					
Fraction	**inch**	**mm**	**Fraction**	**inch**	**mm**
1/64	0.0156	0.397	33/64	0.5156	13.097
1/32	0.0313	0.794	17/32	0.5313	13.494
3/64	0.0469	1.191	35/64	0.5469	13.891
1/16	0.0625	1.588	9/16	0.5625	14.288
5/64	0.0781	1.984	37/64	0.5781	14.684
3/32	0.0938	2.381	19/32	0.5938	15.081
7/64	0.1094	2.778	39/64	0.6094	15.478
1/8	0.1250	3.175	5/8	0.6250	15.875
9/64	0.1406	3.572	41/64	0.6406	16.272
5/32	0.1563	3.969	21/32	0.6563	16.669
11/64	0.1719	4.366	43/64	0.6719	17.066
3/16	0.1875	4.763	11/16	0.6875	17.463
13/64	0.2031	5.159	45/64	0.7031	17.859
7/32	0.2188	5.556	23/32	0.7188	18.256
15/64	0.2344	5.953	47/64	0.7344	18.653
1/4	0.2500	6.350	3/4	0.7500	19.050
17/64	0.2656	6.747	49/64	0.7656	19.447
9/32	0.2813	7.144	25/32	0.7813	19.844
19/64	0.2969	7.541	51/64	0.7969	20.241
5/16	0.3125	7.938	13/16	0.8125	20.638
21/64	0.3281	8.334	53/64	0.8281	21.034
11/32	0.3438	8.731	27/32	0.8438	21.431
23/64	0.3594	9.128	55/64	0.8594	21.828
3/8	0.3750	9.525	7/8	0.8750	22.225
25/64	0.3906	9.922	57/64	0.8906	22.622
13/32	0.4063	10.319	29/32	0.9063	23.019
27/64	0.4219	10.716	59/64	0.9219	23.416
7/16	0.4375	11.113	15/16	0.9375	23.813
29/64	0.4531	11.509	61/64	0.9531	24.209
15/32	0.4688	11.906	31/32	0.9688	24.606
31/64	0.4844	12.303	63/64	0.9844	25.003
1/2	0.5000	12.700	1	1.0000	25.400
Conversion Factor: 1 inch = 25.4					

Metric to US Torque Conversions					
N•m	**ft-lb**	**N•m**	**ft-lb**	**N•m**	**ft-lb**
1	9 in-lb	55	41	155	114
5	44 in-lb	60	44	160	118
6	53 in-lb	65	48	165	122
7	62 in-lb	70	52	170	125
8	71 in-lb	75	55	175	129
9	80 in-lb	80	59	180	133
10	89 in-lb	85	63	185	136
11	97 in-lb	90	66	190	140
12	106 in-lb	95	70	195	144
14	124 in-lb	100	74	200	148
15	133 in-lb	105	77	205	151
16	142 in-lb	110	81	210	155
18	159 in-lb	115	85	215	159
20	15 ft -lb	120	89	220	162
25	18	125	92	225	165
30	22	130	96	230	170
35	26	135	100	235	173
40	30	140	103	240	177
45	33	145	107	245	180
50	37	150	111	250	184

Metric Drill and Tap Chart

Screw Size			Tapping Drills		Clearance Drills			
					Close Fit		Free Fit	
Nom. Dia. (mm)	Pitch (mm)	Series	Drill Size (65-75% thread)	Dec. Equiv.	Drill Size	Dec. Equiv.	Drill Size	Dec. Equiv.
1	0.20	Fine	0.80	0.0315	1.05	0.0413	1.20	0.0472
	0.25	Coarse	0.75	0.0295				
1.1	0.20	Fine	0.90	0.0354	1.15	0.0453	1.30	0.0512
	0.25	Coarse	0.85	0.0335				
1.2	0.20	Fine	1.00	0.0394	1.30	0.0512	1.50	0.0590
	0.25	Coarse	0.95	0.0374				
1.4	0.20	Fine	1.20	0.0472	1.50	0.0591	1.70	0.0669
	0.30	Coarse	1.10	0.0433				
1.6	0.20	Fine	1.40	0.0551	1.70	0.0669	2.00	0.0787
	0.35	Coarse	1.25	0.0492				
1.8	0.20	Fine	1.60	0.0630	1.90	0.0748	2.20	0.0866
	0.35	Coarse	1.45	0.0571				
2	0.25	Fine	1.75	0.0689	2.20	0.0866	2.60	0.1024
	0.40	Coarse	1.60	0.0630				
2.2	0.25	Fine	1.95	0.0768	2.40	0.0945	2.80	0.1102
	0.45	Coarse	1.75	0.0689				
2.5	0.35	Fine	2.15	0.0846	2.70	0.1063	3.10	0.1220
	0.45	Coarse	2.05	0.0807				
3	0.35	Fine	2.65	0.1043	3.20	0.1260	3.60	0.1417
	0.50	Coarse	2.50	0.0984				
3.5	0.35	Fine	3.15	0.1240	3.70	0.1457	4.20	0.1653
	0.60	Coarse	2.90	0.1142				
4	0.50	Fine	3.50	0.1378	4.30	0.1693	4.80	0.1890
	0.70	Coarse	3.30	0.1299				
4.5	0.50	Fine	4.00	0.1575	4.80	0.1890	5.30	0.2087
	0.75	Coarse	3.70	0.1457				
5	0.50	Fine	4.50	0.1772	5.30	0.2087	5.80	0.2283
	0.80	Coarse	4.20	0.1654				
6	0.75	Fine	5.25	0.2067	6.40	0.2520	7.00	0.2756
	1.00	Coarse	5.00	0.1969				
7	0.75	Fine	6.25	0.2461	7.40	0.2913	8.00	0.3150
	1.00	Coarse	6.00	0.2362				
8	0.75	Fine	7.25	0.2854	8.40	0.3307	10.00	0.3937
	1.00	Fine	7.50	0.2953				
	1.25	Coarse	6.80	0.2677				

Nom. Dia. (mm)	Pitch (mm)	Series	Drill Size (65-75% thread)	Dec. Equiv.	Drill Size	Dece. Equiv.	Drill Size	Dece. Equiv.
9	0.75	Fine	8.25	0.3248	9.50	0.3740	10.50	0.4134
	1.00	Fine	8.00	0.3150				
	1.25	Coarse	7.80	0.3071				
10	0.75	Fine	9.25	0.3642	10.50	0.4134	12.00	0.4724
	1.00	Fine	9.00	0.3543				
	1.25	Fine	8.80	0.3465				
	1.50	Coarse	8.50	0.3346				
11	0.75	Fine	10.25	0.4035	12.00	0.4724	13.00	0.5118
	1.00	Fine	10.00	0.3937				
	1.50	Coarse	9.50	0.3740				
12	1.00	Fine	11.00	0.4331	13.00	0.5118	15.00	0.5905
	1.25	Fine	10.75	0.4232				
	1.50	Fine	10.50	0.4134				
	1.75	Coarse	10.20	0.4016				
14	1.00	Fine	13.00	0.5118	15.00	0.5905	17.00	.6693
	1.25	Fine	12.80	0.5039				
	1.50	Fine	12.50	0.4921				
	2.00	Coarse	12.00	0.4724				
15	1.00	Fine	14.00	0.5512	16.00	0.6299	18.00	0.7087
	1.50	Fine	13.50	0.5315				
16	1.00	Fine	15.00	0.5906	17.00	0.6693	19.00	0.7480
	1.50	Fine	14.50	0.5709				
	2.00	Coarse	14.00	0.5512				
17	1.00	Fine	16.00	0.6299	18.00	0.7087	20.00	0.7874
	1.50	Fine	15.50	0.6103				
18	1.00	Fine	17.00	0.6693	19.00	0.7480	21.00	0.8268
	1.50	Fine	16.50	0.6496				
	2.00	Fine	16.00	0.6299				
	2.50	Coarse	15.50	0.6102				
20	1.00	Fine	19.00	0.7480	21.00	0.8268	24.00	0.9449
	1.50	Fine	18.50	0.7283				
	2.00	Fine	18.00	0.7087				
	2.50	Coarse	17.50	0.6890				
22	1.00	Fine	21.00	0.8268	23.00	0.9055	26.00	1.0236
	1.50	Fine	20.50	0.8071				
	2.00	Fine	20.00	0.7874				
	2.50	Coarse	19.50	0.7677				
24	1.00	Fine	23.00	0.9055	25.00	0.9842	28.00	1.1024
	1.50	Fine	22.50	0.8858				
	2.00	Fine	22.00	0.8661				
	3.00	Coarse	21.00	0.8268				
25	1.00	Fine	24.00	0.9449	26.00	1.0236	30.00	1.1811
	1.50	Fine	23.50	0.9252				
	2.00	Fine	23.00	0.9055				
26	1.50	Fine	24.50	0.9646				

Nom. Dia. (mm)	Pitch (mm)	Series	Drill Size (65-75% thread)	Dec. Equiv.	Drill Size	Dece. Equiv.	Drill Size	Dece. Equiv.
27	1.00	Fine	26.00	1.0236	28.00	1.1024	32.00	1.2598
	1.50	Fine	25.50	1.0039				
	2.00	Fine	25.00	0.9843				
	3.00	Coarse	24.00	0.9449				
28	1.00	Fine	27.00	1.0630				
	1.50	Fine	26.50	1.0433				
	2.00	Fine	26.00	1.0236				
30	1.00	Fine	29.00	1.1417	31.00	1.2205	35.00	1.3779
	1.50	Fine	28.50	1.1220				
	2.00	Fine	28.00	1.1024				
	3.00	Fine	27.00	1.0630				
	3.50	Coarse	26.50	1.0433				
32	1.50	Fine	30.50	1.2008				
	2.00	Fine	30.00	1.1811				
33	1.50	Fine	31.50	1.2402	34.00	1.3386	38.00	1.4961
	2.00	Fine	31.00	1.2205				
	3.00	Fine	30.00	1.1811				
	3.50	Coarse	29.50	1.1614				
35	1.50	Fine	33.50	1.3189				
	2.00	Fine	33.00	1.2992				
36	1.50	Fine	34.50	1.3583	37.00	1.4567	42.00	1.6535
	2.00	Fine	34.00	1.3386				
	3.00	Fine	33.00	1.2992				
	4.00	Coarse	32.00	1.2598				
39	1.50	Fine	37.50	1.4764	40.00	1.5748	45.00	1.7716
	2.00	Fine	37.00	1.4567				
	3.00	Fine	36.00	1.4173				
	4.00	Coarse	35.00	1.3780				
40	1.50	Fine	38.50	1.5157				
	2.00	Fine	38.00	1.4961				
	3.00	Fine	37.00	1.4567				
42	1.50	Fine	40.50	1.5945	43.00	1.6929	48.00	1.8898
	2.00	Fine	40.00	1.5748				
	3.00	Fine	39.00	1.5354				
	4.00	Fine	38.00	1.4961				
	4.50	Coarse	37.50	1.4764				
45	1.50	Fine	43.50	1.7126	46.00	1.8110	52.00	2.0472
	2.00	Fine	43.00	1.6929				
	3.00	Fine	42.00	1.6535				
	4.00	Fine	41.00	1.6142				
	4.50	Coarse	40.50	1.5945				
48	1.50	Fine	46.50	1.8307	50.00	1.9685	56.00	2.2047
	2.00	Fine	46.00	1.8110				
	3.00	Fine	45.00	1.7717				
	4.00	Fine	44.00	1.7323				
	5.00	Coarse	43.00	1.6929				
50	1.50	Fine	48.50	1.9094				
	2.00	Fine	48.00	1.8898				
	3.00	Fine	47.00	1.8504				

Nom. Dia. (mm)	Pitch (mm)	Series	Drill Size (65-75% thread)	Dec. Equiv.	Drill Size	Dece. Equiv.	Drill Size	Dece. Equiv.
52	1.50	Fine	50.50	1.9882	54.00	2.1260	62.00	2.4409
	2.00	Fine	50.00	1.9685				
	3.00	Fine	49.00	1.9291				
	4.00	Fine	48.00	1.8898				
	5.00	Coarse	47.00	1.8504				
55	1.50	Fine	53.50	2.1063				
	2.00	Fine	53.00	2.0866				
	3.00	Fine	52.00	2.0472				
	4.00	Fine	51.00	2.0079				
56	1.50	Fine	54.50	2.1457	58.00	2.2835	66.00	2.5984
	2.00	Fine	54.00	2.1260				
	3.00	Fine	53.00	2.0866				
	4.00	Fine	52.00	2.0472				
	5.50	Coarse	50.50	1.9882				

Weights and Measures Conversion Factors						
Quantity	**U.S. Customary**		**Metric**		**From U.S. Customary To Metric Multiply By**	**From Metric To U.S. Customary Multiply By**
	Unit Name	**Abbreviation**	**Unit Name**	**Abbreviation**		
Area	sq. inch	in^2	sq. millimeters	mm^2	645.16	0.001550
			sq. centimeters	cm^2	6.452	0.155
	sq. foot	ft^2	sq. meter	m^2	0.0929	10.764
Fuel Consumption	pounds per horsepower hour	lb/hp-hr	grams per kilowatt hour	g/kW-hr	608.277	0.001645
Fuel Performance	miles per gallon	mpg	kilometers per liter	km/l	0.4251	2.352
	gallons per mile	gpm	liters per kilometer	l/km	2.352	0.4251
Force	pounds force	lbf	Newton	N	4.4482	0.224809
Length	inch	in	millimeters	mm	25.40	0.039370
	foot	ft	millimeters	mm	304.801	0.00328
Power	horsepower	hp	kilowatt	kW	0.746	1.341
Pressure	pounds force per sq. inch	psi	kilopascal	kPa	6.8948	0.145037
	inches of mercury	in Hg	kilopascal	kPa	3.3769	0.29613
	inches of water	in H_2O	kilopascal	kPa	0.2488	4.019299
	inches of mercury	in Hg	millimeters of mercury	mm Hg	25.40	0.039370
	inches of water	in H_2O	millimeters of water	mm H_2O	25.40	0.039370
	bars	bars	kilopascals	kPa	100.001	0.00999
	bars	bars	millimeters of mercury	mm Hg	750.06	0.001333
Temperature	fahrenheit	°F	centigrade	°C	(°F-32) ÷1.8	(1.8 x °C) +32
Torque	pound force per foot	ft-lb	Newton-meter	N•m	1.35582	0.73756
	pound force per inch	in-lb	Newton-meter	N•m	0.113	8.850756

	Unit Name	Abbreviation	Unit Name	Abbreviation	From U.S. Customary To Metric Multiply By	From Metric To U.S. Customary Multiply By
Velocity	miles/hour	mph	kilometers/hour	kph	1.6093	0.6214
Volume: liquid displacement	gallon (U.S.)	gal.	liter	l	3.7853	0.264179
	gallon (Imp*)	gal.	liter	l	4.546	0.219976
	cubic inch	in^3	liter	l	0.01639	61.02545
	cubic inch	in^3	cubic centimeter	cm^3	16.387	0.06102
Weight (mass)	pounds (avoir.)	lb	kilograms	kg	0.4536	2.204623
Work	British Thermal Unit	BTU	joules	J	1054.5	0.000948
	British Thermal Unit	BTU	kilowatt -hour	kW-hr	0.000293	3414
	horsepower hours	hp-hr	kilowatt -hour	kW-hr	0.746	1.341

SAKAI HEAVY INDUSTRIES, LTD.

Head Office: 1-4-8, Shiba Daimon, Minato-ku,
Tokyo, Japan
Telephone: Tokyo (03) 3431-9971
Facsimile: (03) 3436-6212

2008-01